*Clock Escapements

The Recoil and Dead Beat Escapement

*The Recoil Strip Escapement

Escapement Component Issues,
Drop Terminology,
Repair, Replacement

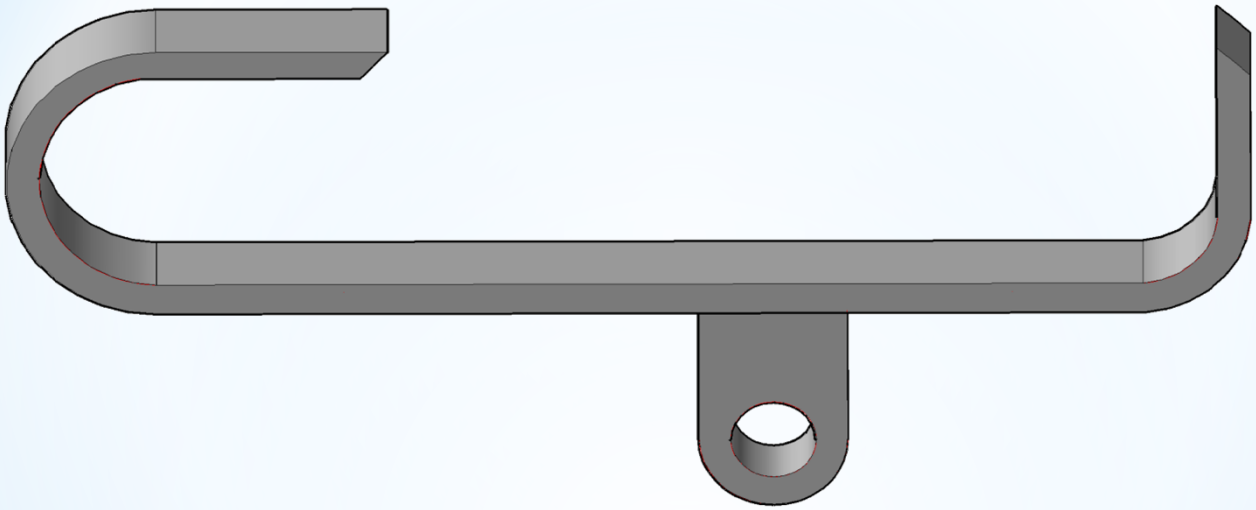

*Recoil Verge

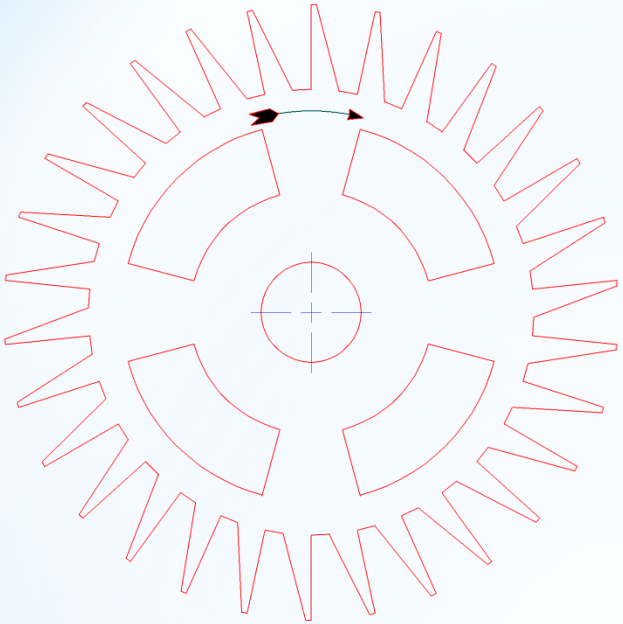

Recoil Escape Wheel

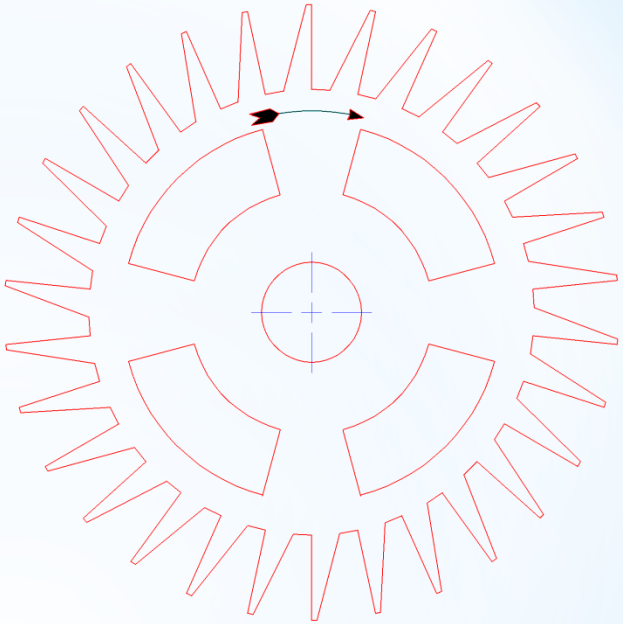

Dead-Beat Escape Wheel

*Escape Wheel Designs

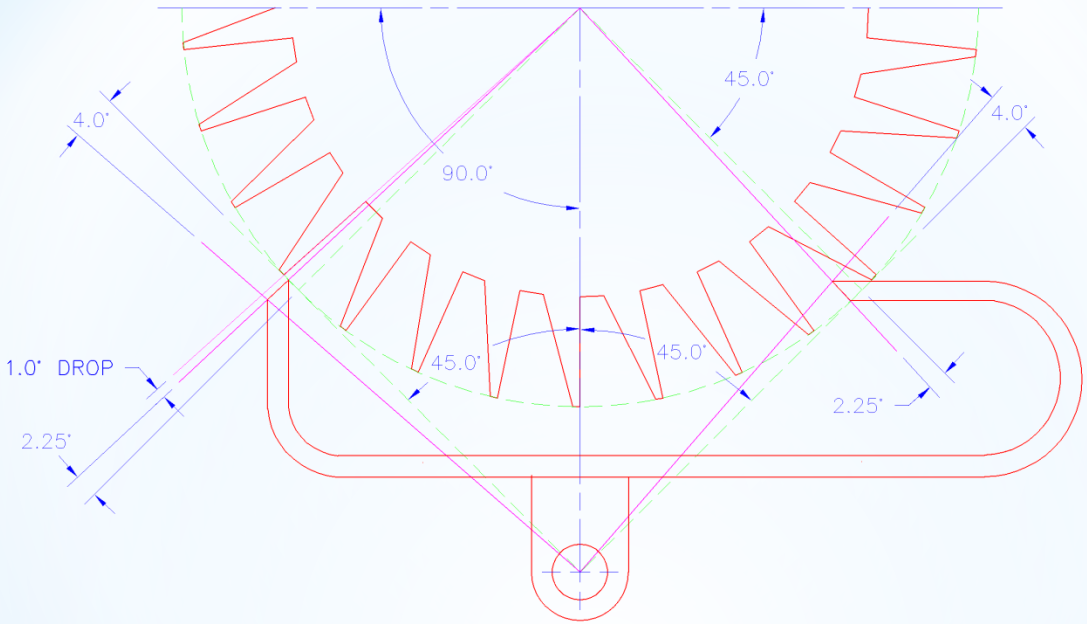

*Recoil Verge Design

* Caution Before Making any Escapement Adjustments

* Before making any adjustments, please study and understand the escapement issues.
  - ✓ Understand the repair & adjustment procedure before making any changes.
  - ✓ Study a properly adjusted escapement on another clock to better understand the operation.
  - ✓ Do not make irreversible changes before the problem is understood.

* The Recoil Strip Escapement

Escapement Component Issues

* Repair the Escapement Components Before Adjusting Verge

* Escapement Conditioning
  * straightening escape wheel teeth
  * make the escape wheel concentric and true
  * properly bushing escapement before adjusting
* The escape wheel and verge bushings must not be too loose.
* The arbor & crutch connection to the verge cannot be loose.
* Remember, a worn escapement cannot reliably be adjusted.

*Escapement Component Issues

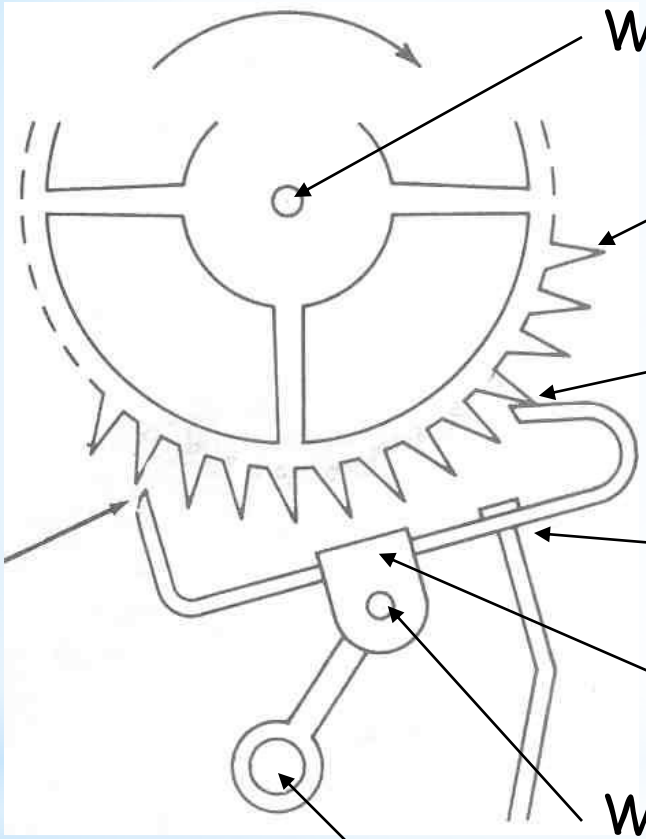

*Drop Terminology

*Drop Terminology

The escapement drop can be described in several different ways:

* Drop is the airspace between the leading edge of a tooth-point and the surface of the pallet it is about to fall on.
* <u>Entrance pallet drop</u> occurs when a tooth is released from the entrance pallet.
* <u>Exit pallet drop</u> occurs when a tooth is released from the exit pallet.

*Recoil Adjustment Goals

- The goal to adjusting an escapement is to have the "drop" onto a pallet, **Small, Safe & Equal***.
  - ✓ **Small:** any drop is wasted power, but there must be some, so it should be as small as possible.
  - ✓ **Safe:** sufficient not to lock on a any tooth…ever.
  - ✓ **Equal:** drop onto the entrance and exit pallet must be equal for each tooth.

***Goodman; *This Old Clock*, p29**

*Adjust Drop onto the Entrance Pallet

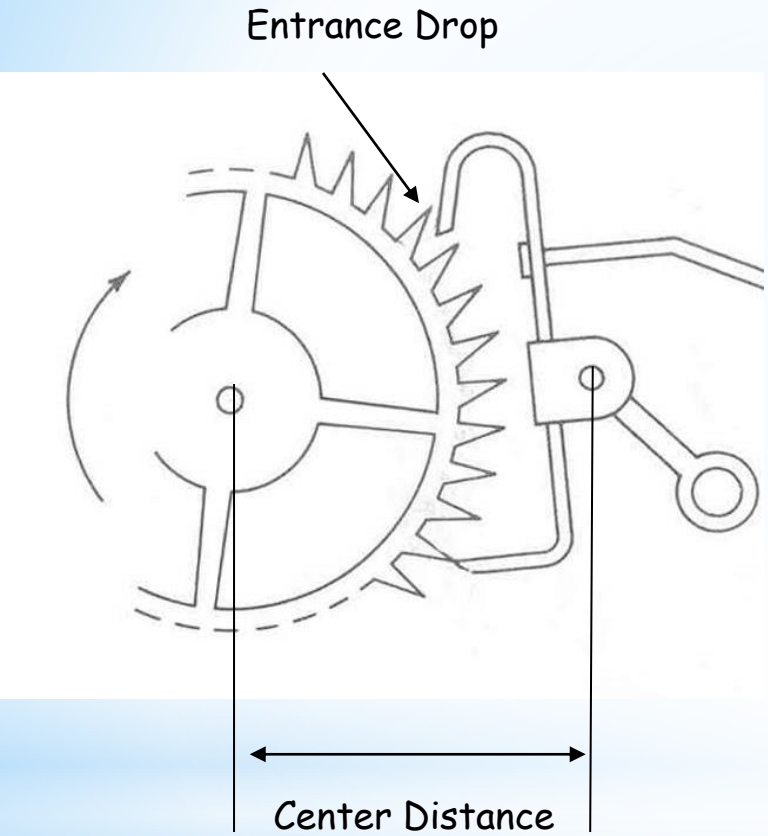

* Close center distance to close DROP <u>onto</u> the entrance pallet.
* Open center distance to open DROP <u>onto</u> the entrance pallet.

*Adjust Drop onto the Exit Pallet

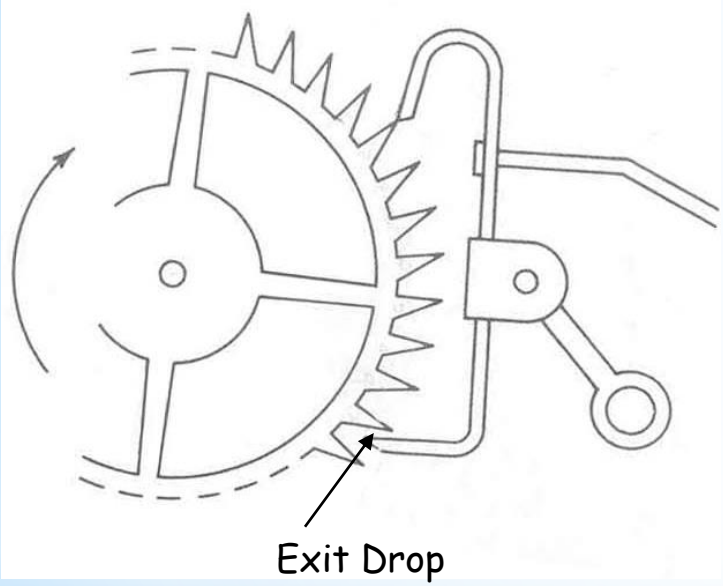

Make sure the metal between the pallets is soft

Bend Verge to adjust the DROP onto the exit pallet

*Close the verge to close the DROP onto the exit pallet.

*Open the verge to open the DROP onto the exit pallet.

*The ***center distance*** may need to be re-adjusted after bending the verge.

*Pallet Adjustment #1

Before bending, test verge center with file for softness.

Tap in center of verge

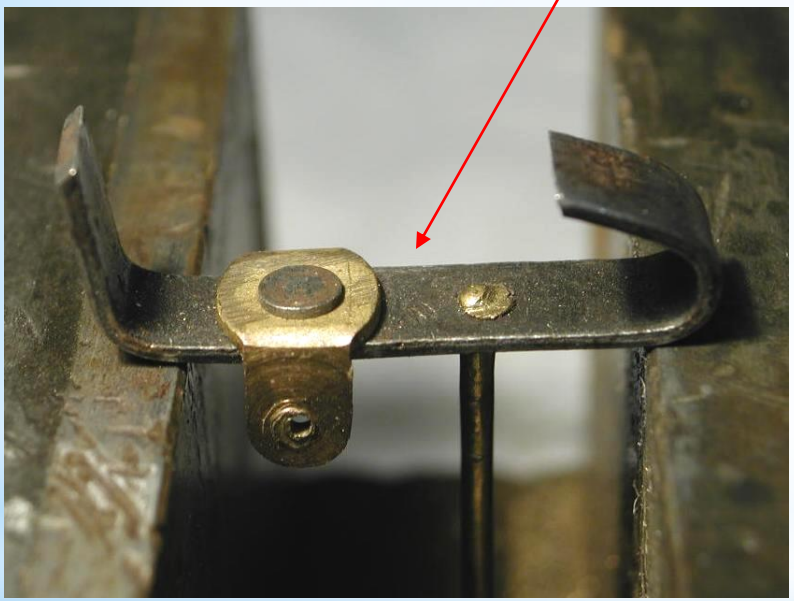

To close verge

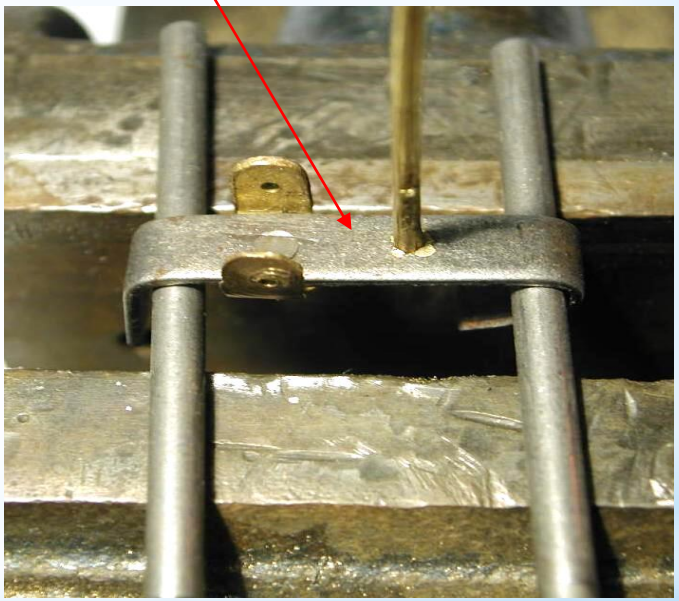

To open verge

Lightly tap verge with flat punch & light weight hammer

*Pallet Adjustment #2

Before bending, test verge center with file for softness.

M&B Verge Adjuster

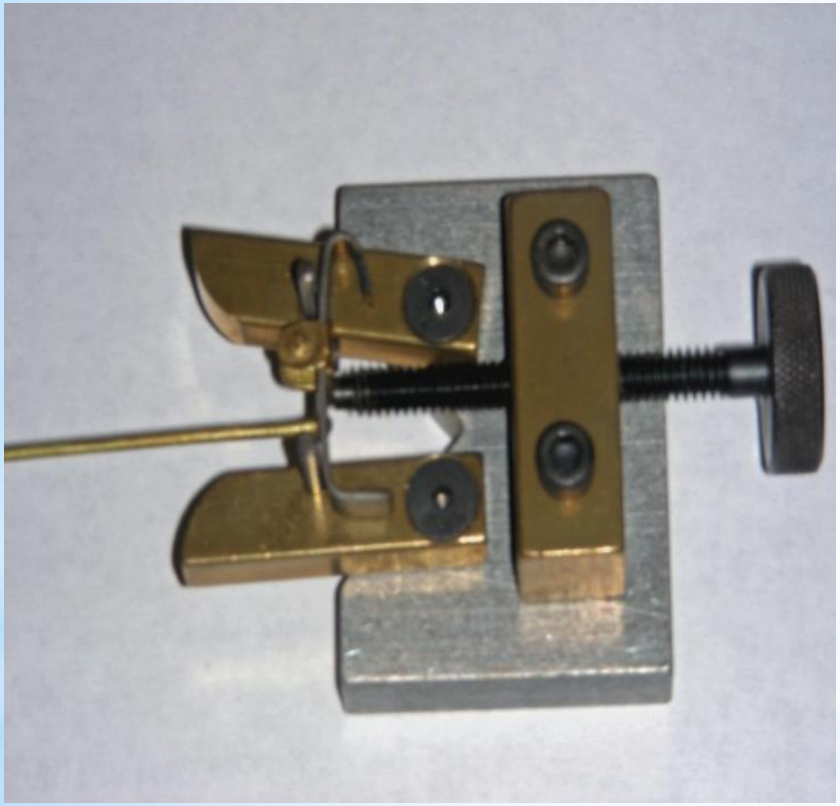

To close verge

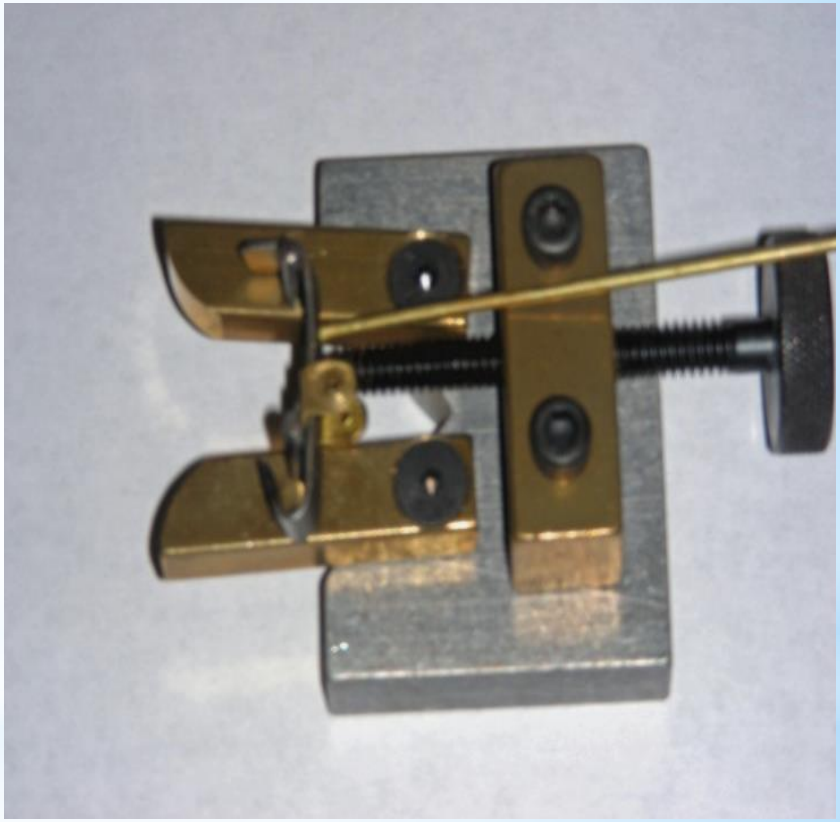

To open verge

*Test Drop After Verge Adjustment

1. Re-measure and record the amount pallets were opened or closed.
2. Put verge in clock and test both drops.
3. Center distance may need to be adjusted.
4. Determine if verge needs to be opened or closed again and about how much.
5. Repeat 1 to 4 until the entrance & exit pallets drop are equal.

* Bad Repairs
* Pallet Faces

*Proper Recoil Repair?

*Underside Of Verge

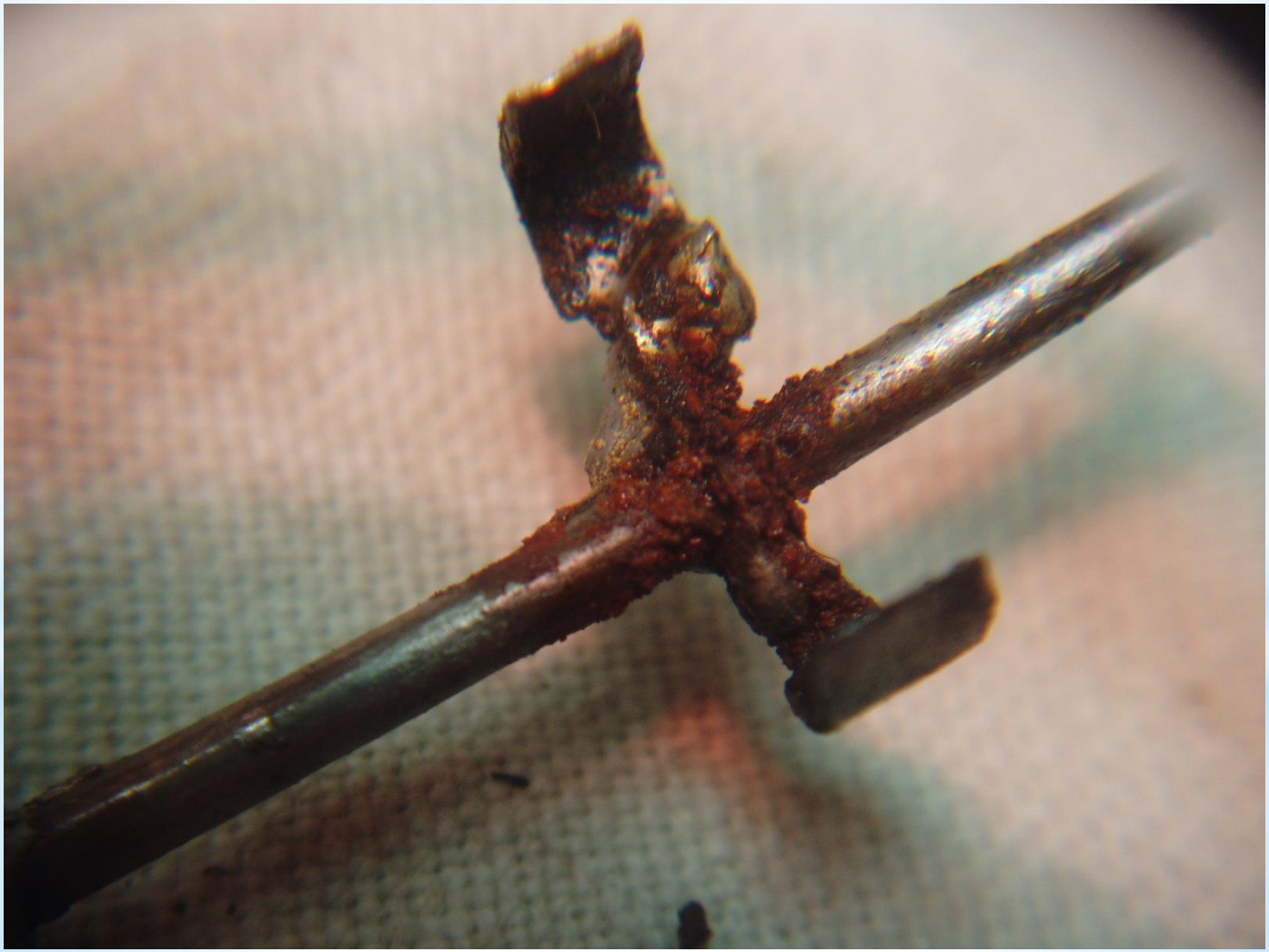

*Broken Pallets

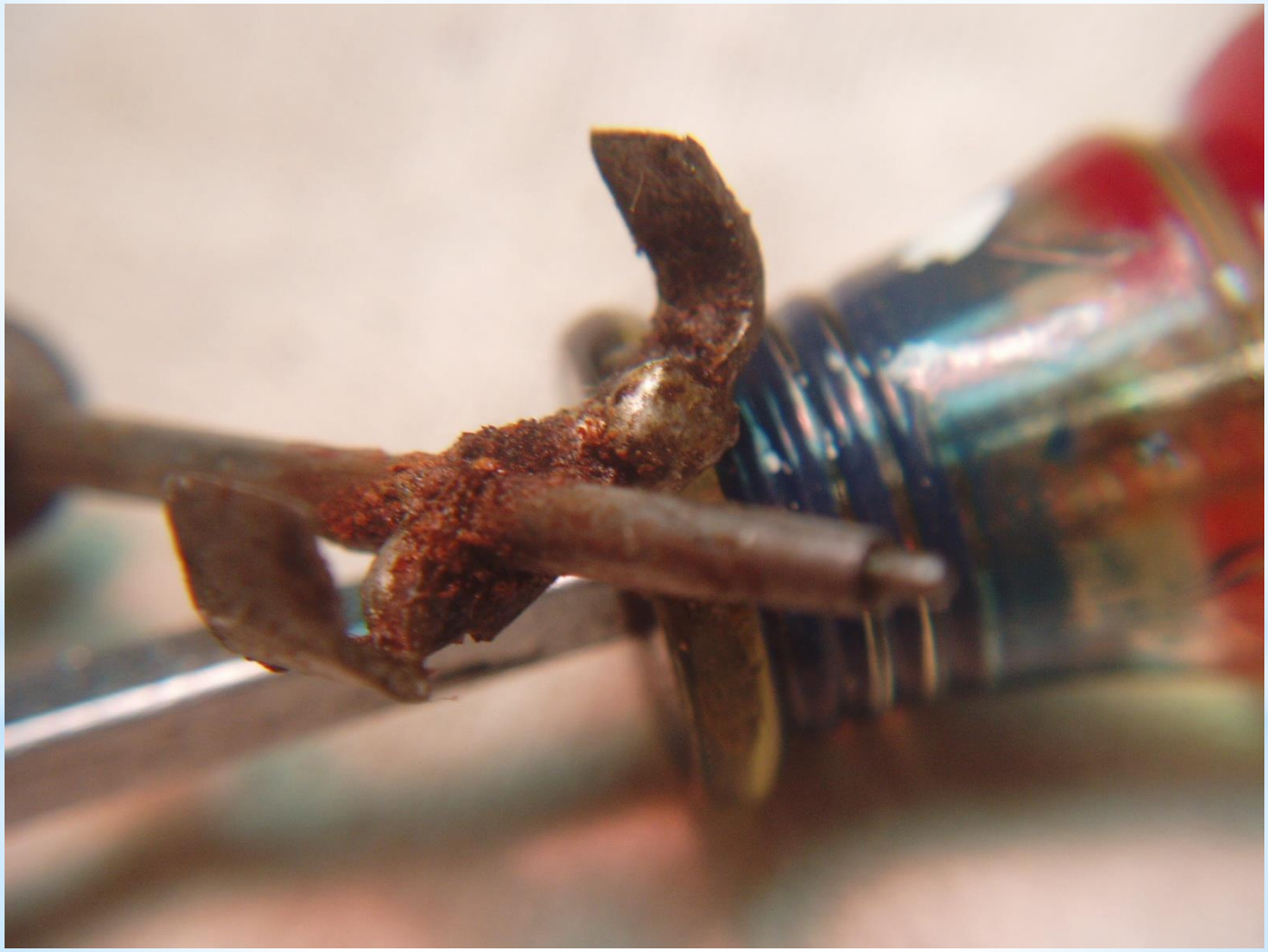

*Wheel Soldered In Movement

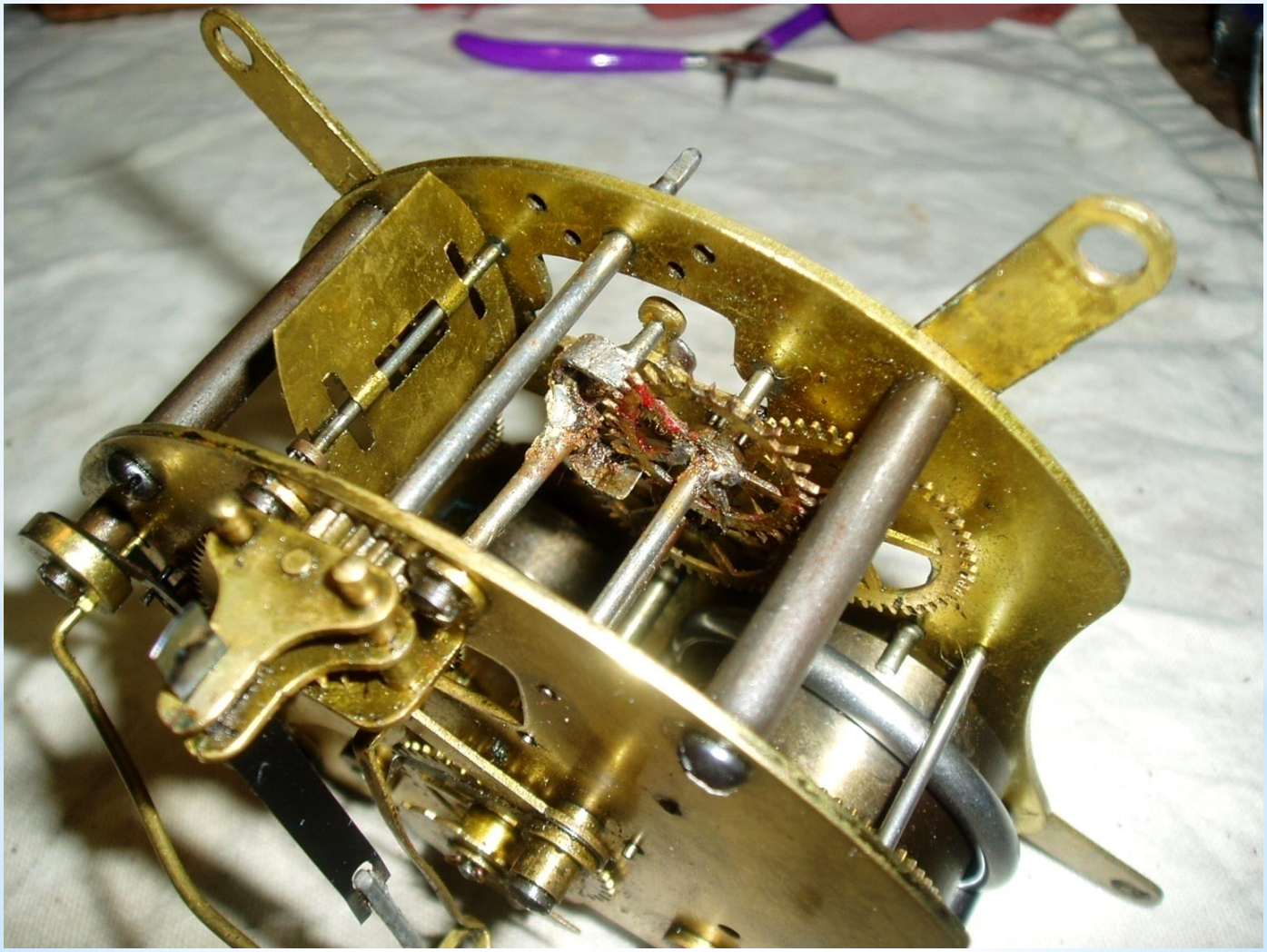

*Escape Wheel

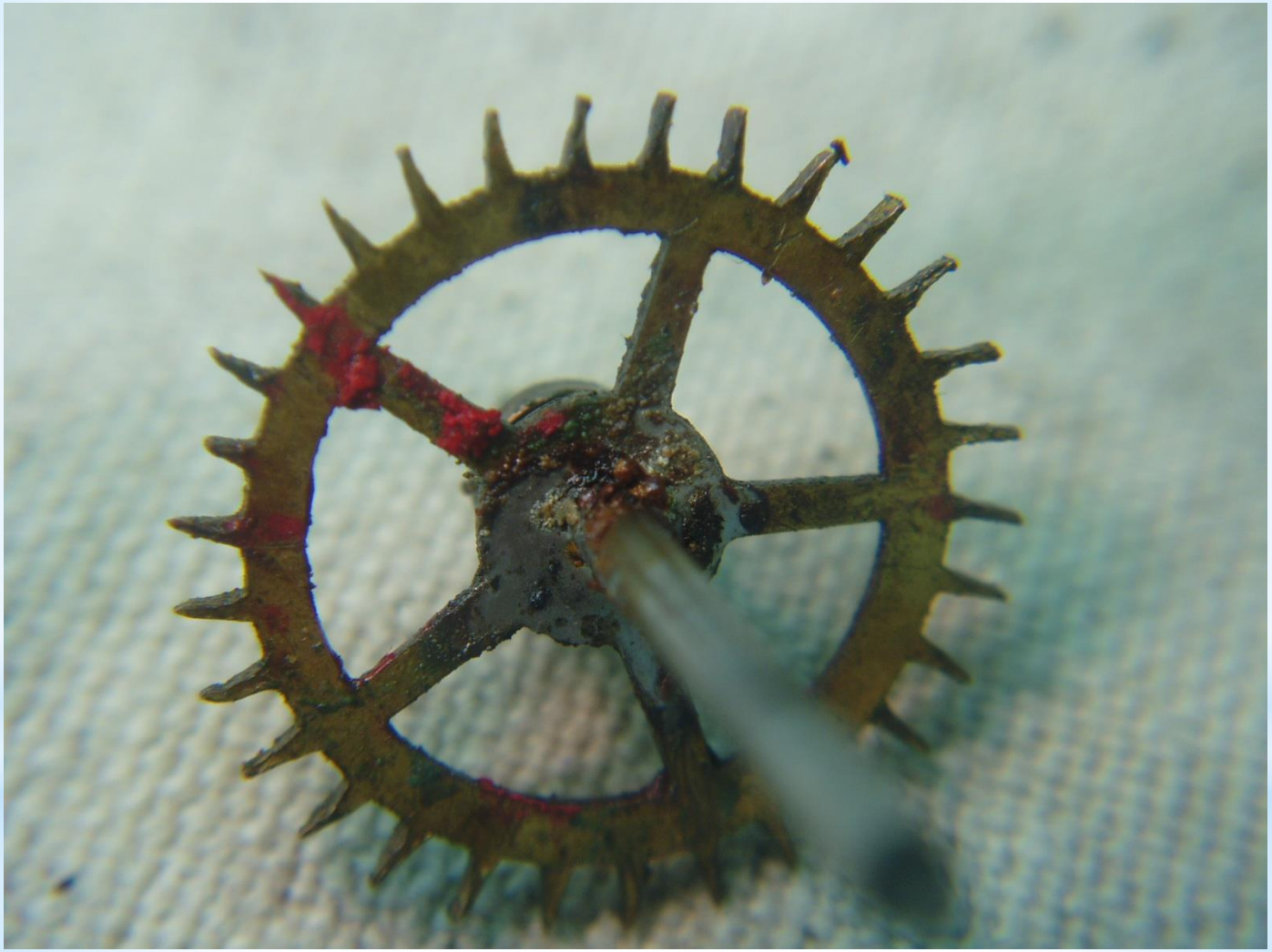

*Wear on Pallets

*Wear on Recoil Entrance

What causes pallet wear?

1. Too much drop
2. Too much train power
3. Too much oil/grit on wheel

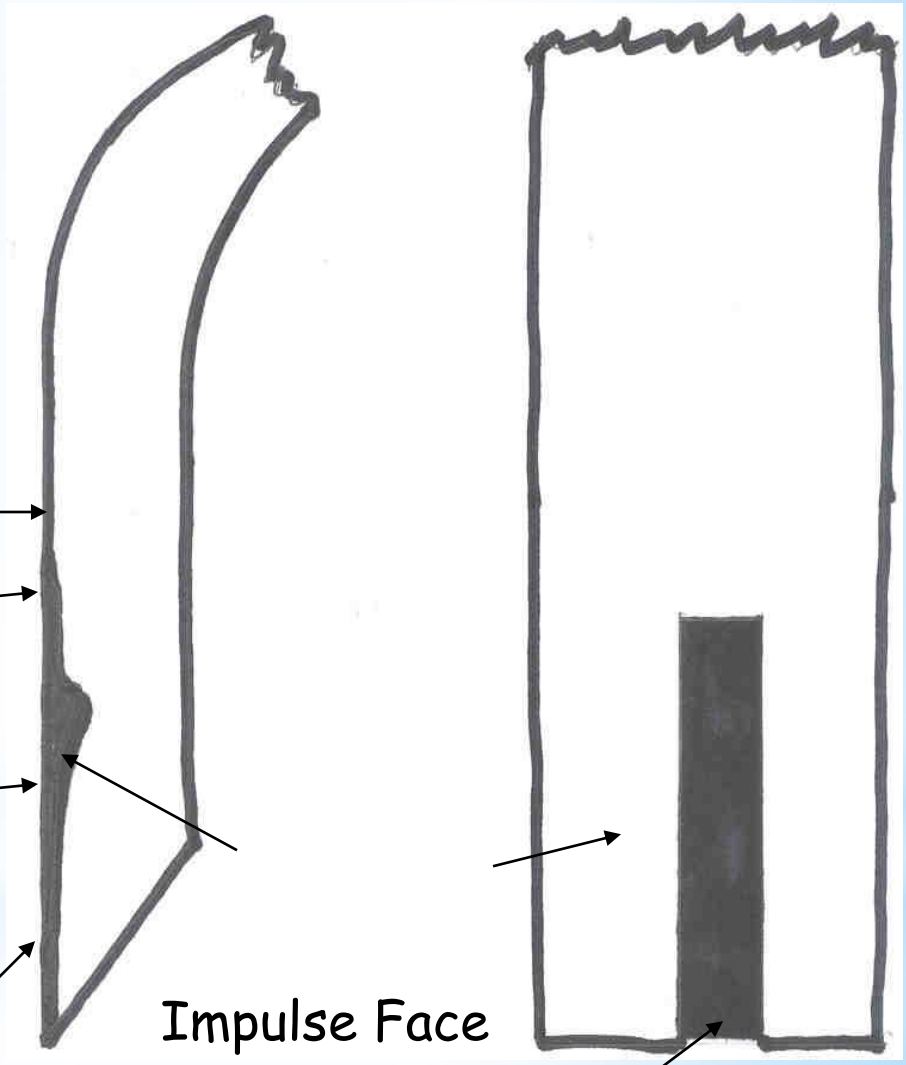

*Tools For Repair

* Measuring Device
* Glass Slide
* Feeler Gauge
* Stones Or Diamond Files
* Buff Sticks

*Recoil Strip Repair Tips

*Try not to change escapement geometry.

*Always soften pallets before attempting to make any bends in verge.

*Never stone or file across pallet faces.

*Measure Pallet Tip Distance

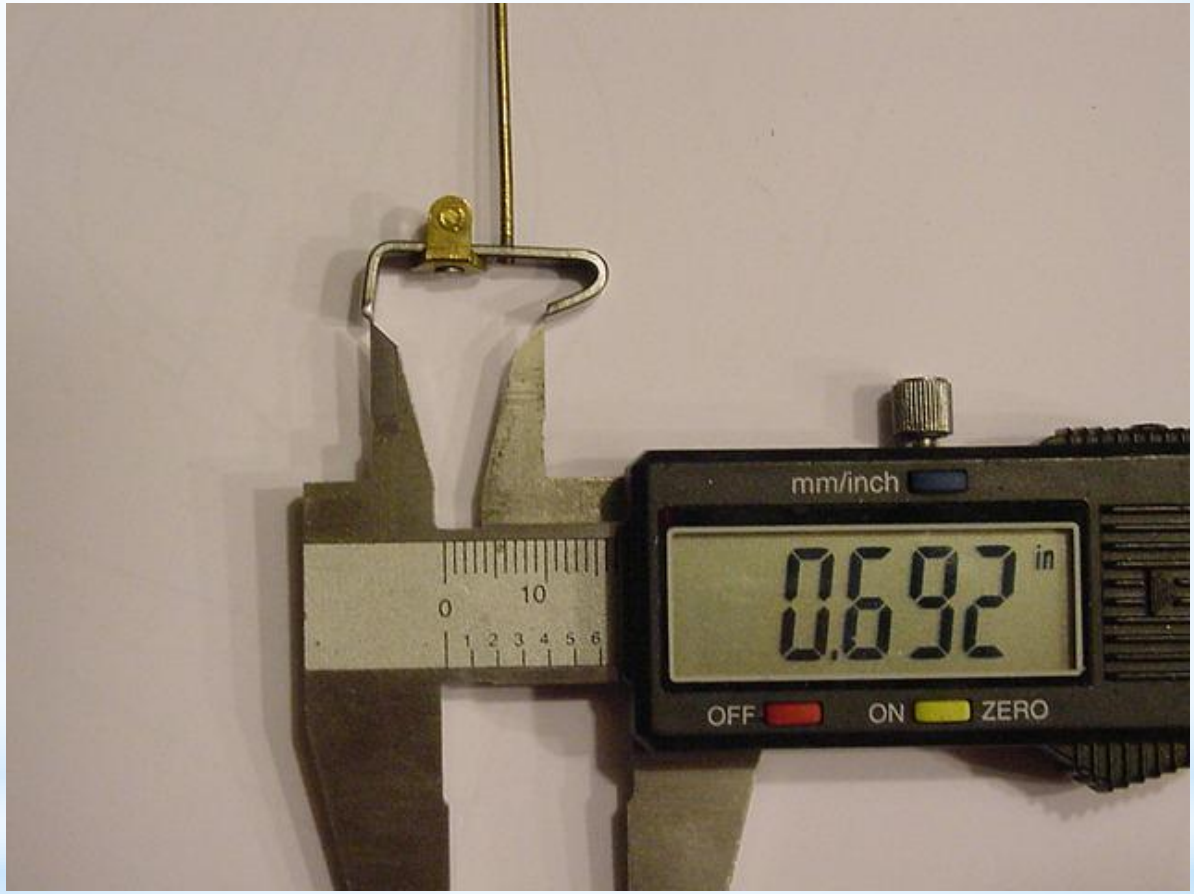

Make and record a measurement between pallets tips before starting.

*Measure Length Of Exit Pallet

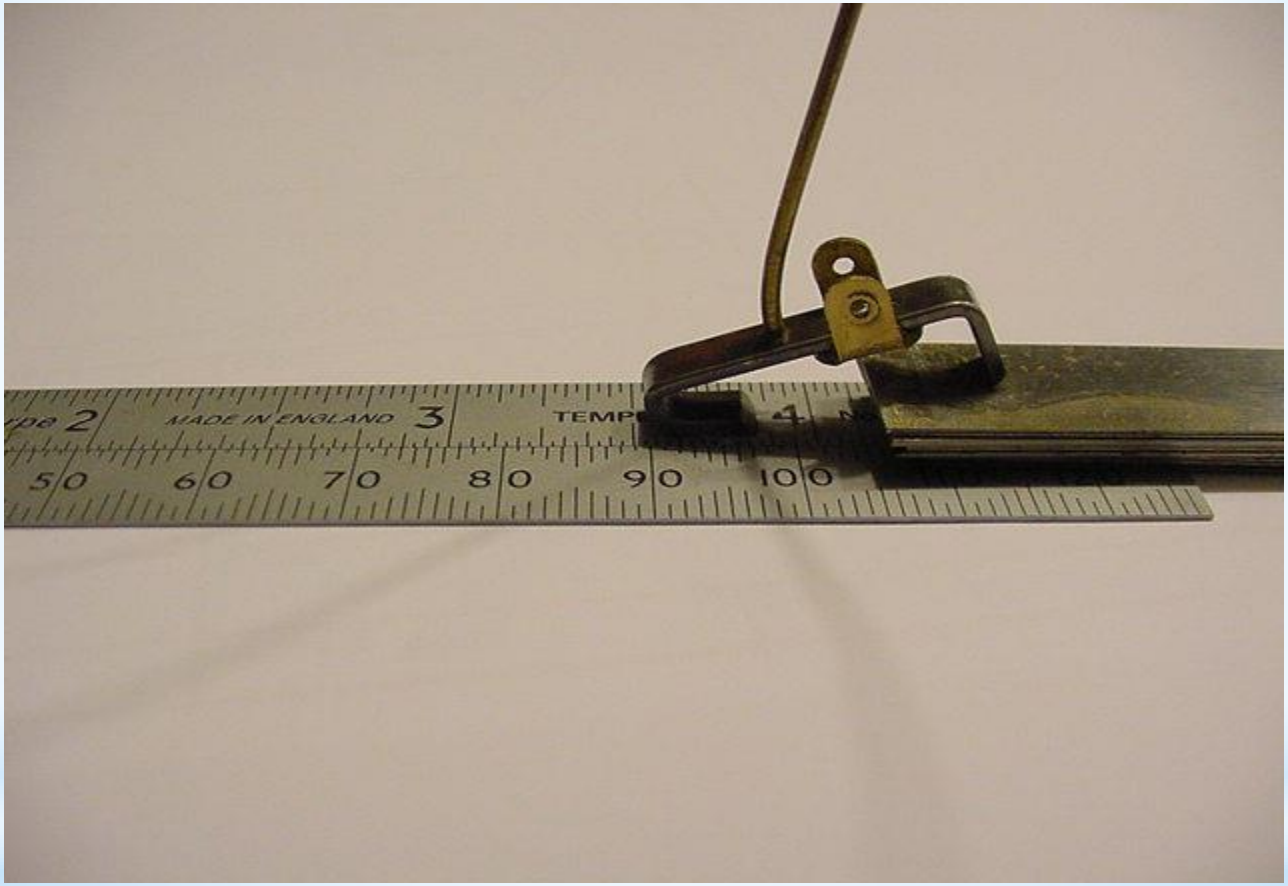

Make and record a measurement between exit pallet and glass.

*Stones / Diamond Files

*Pallet Repair

1. Diamond file or stone

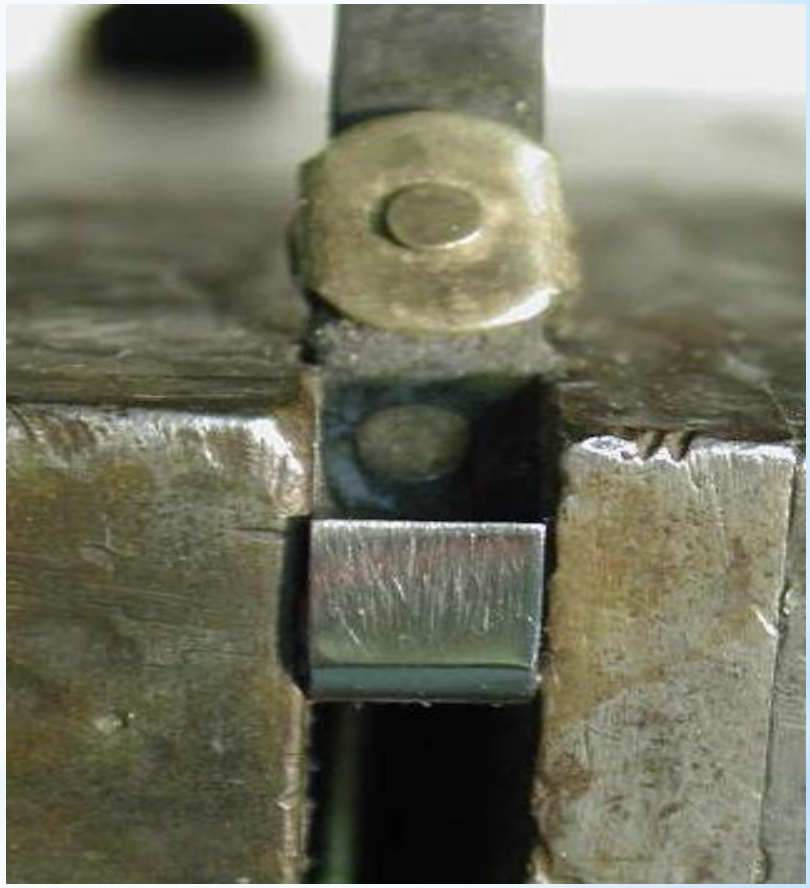

2. Stone and/or compound to remove all scratches

*Check Tip To Tip Of Pallets

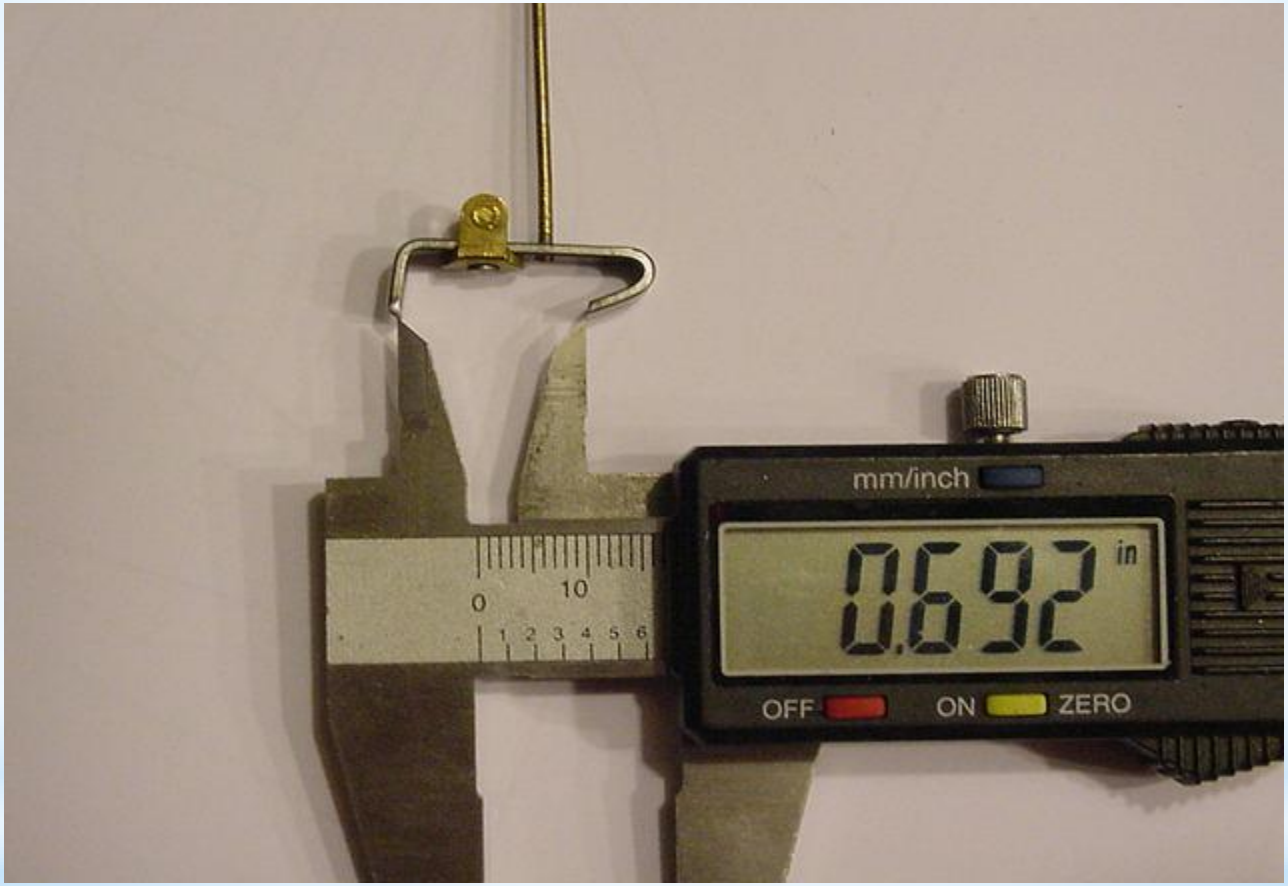

Check measurement between pallets and adjust.

*Check Length Of Exit Pallet

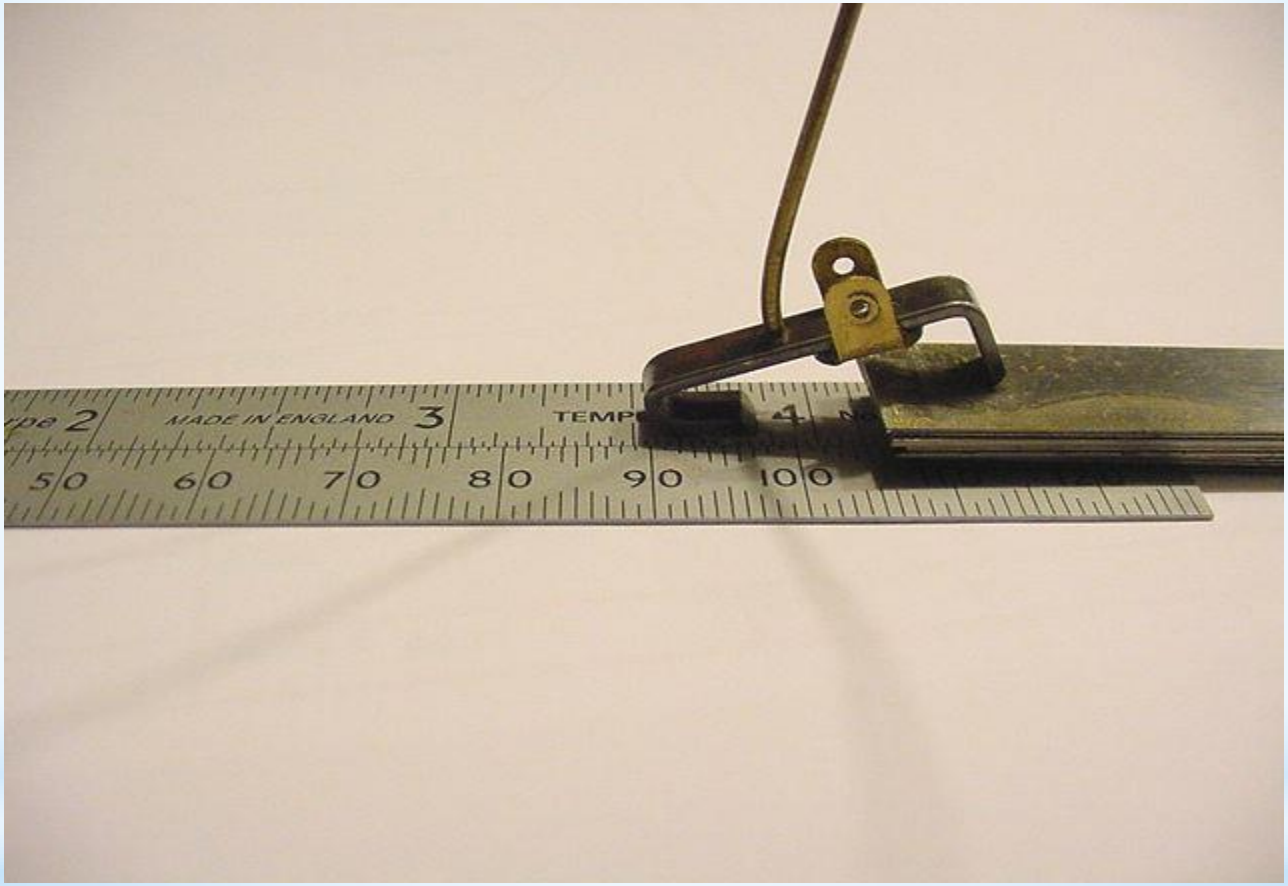

Check measurement between exit pallet and glass, adjust.

*Pallet Adjustment #1

Before bending, test verge center with file for softness.

Tap in center of verge

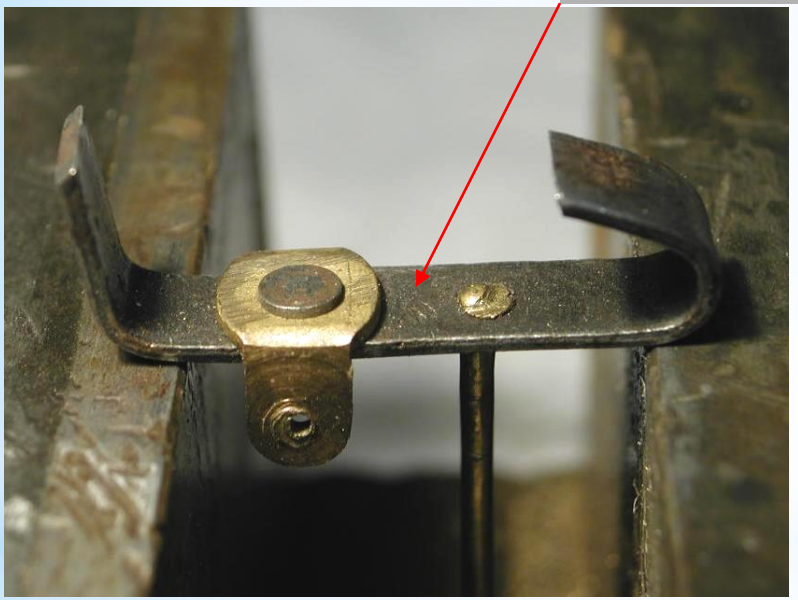

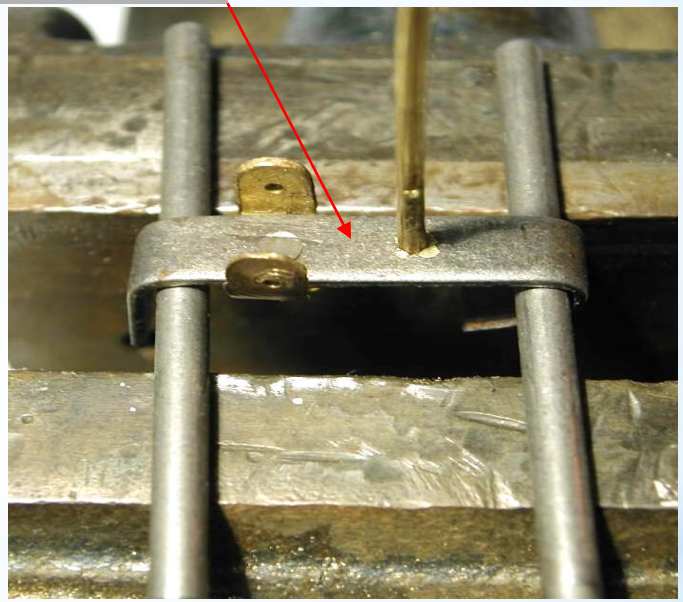

To close verge

To open verge

Lightly tap verge with flat punch & light weight hammer

*Pallet Adjustment #2

Before bending, test verge center with file for softness.

M&B Verge Adjuster

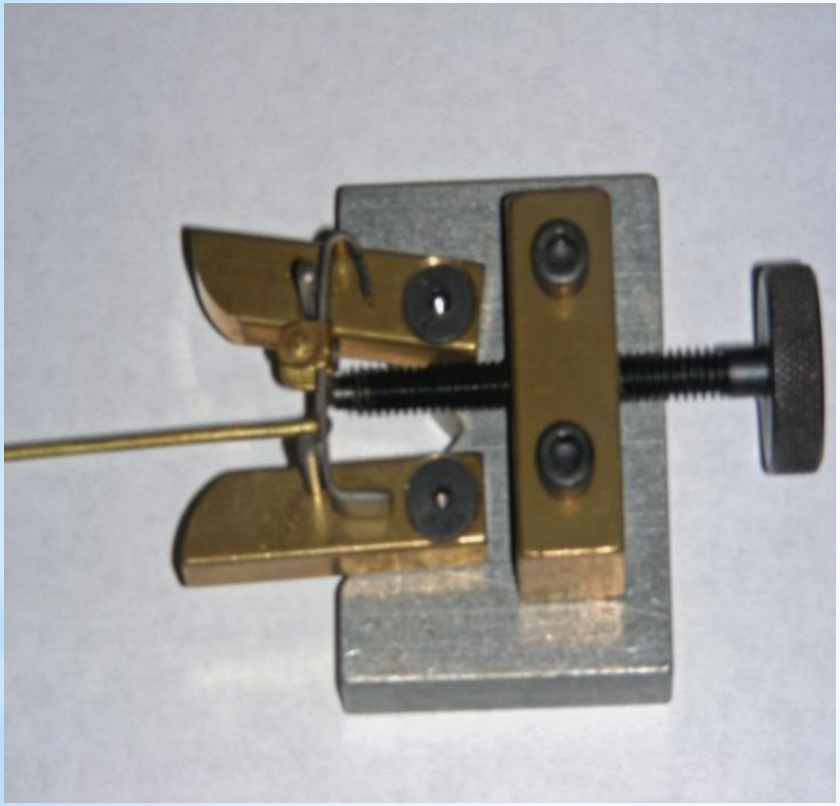

To close verge

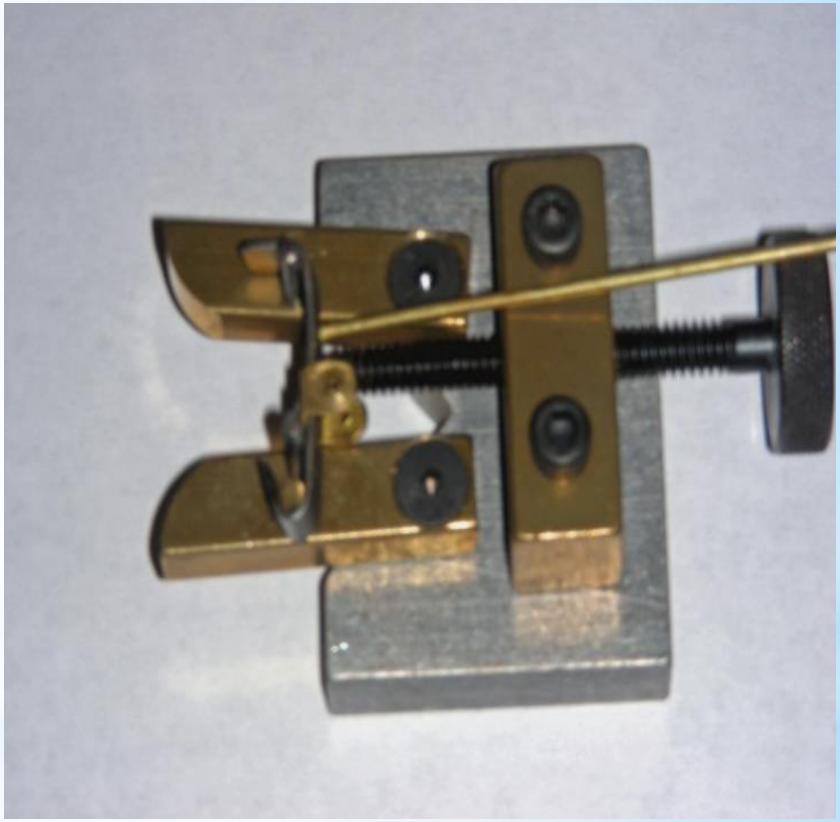

To open verge

*Test Drop After Verge Adjustment

1. Re-measure and record the amount pallets were opened or closed.
2. Put verge in clock and test both drops.
3. Center distance may need to be adjusted.
4. Determine if verge needs to be opened or closed again and about how much.
5. Repeat 1 to 4 until the entrance & exit pallets drop are equal.

*Replacing a missing recoil verge.

*Recoil Strip Replacement

- *Use unbent verge blanks
  - *Always soften verge blank.
    - *Bring to cherry red and cool slowly.
  - *Broach out the verge saddle to fit pin
    - *Remember to broach from both ends due to tapered reamers.
  - *Calculate the number of teeth that the verge will span.

*Verge Span

Count Number of teeth on the escape wheel.

Multiply by 20%. This will give you the number of teeth the verge will have to span.

Add ½ tooth to the total

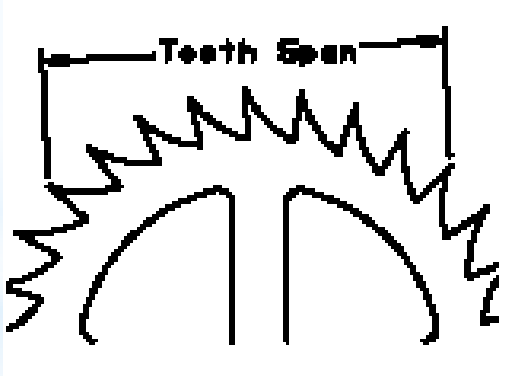

*Verge Layout

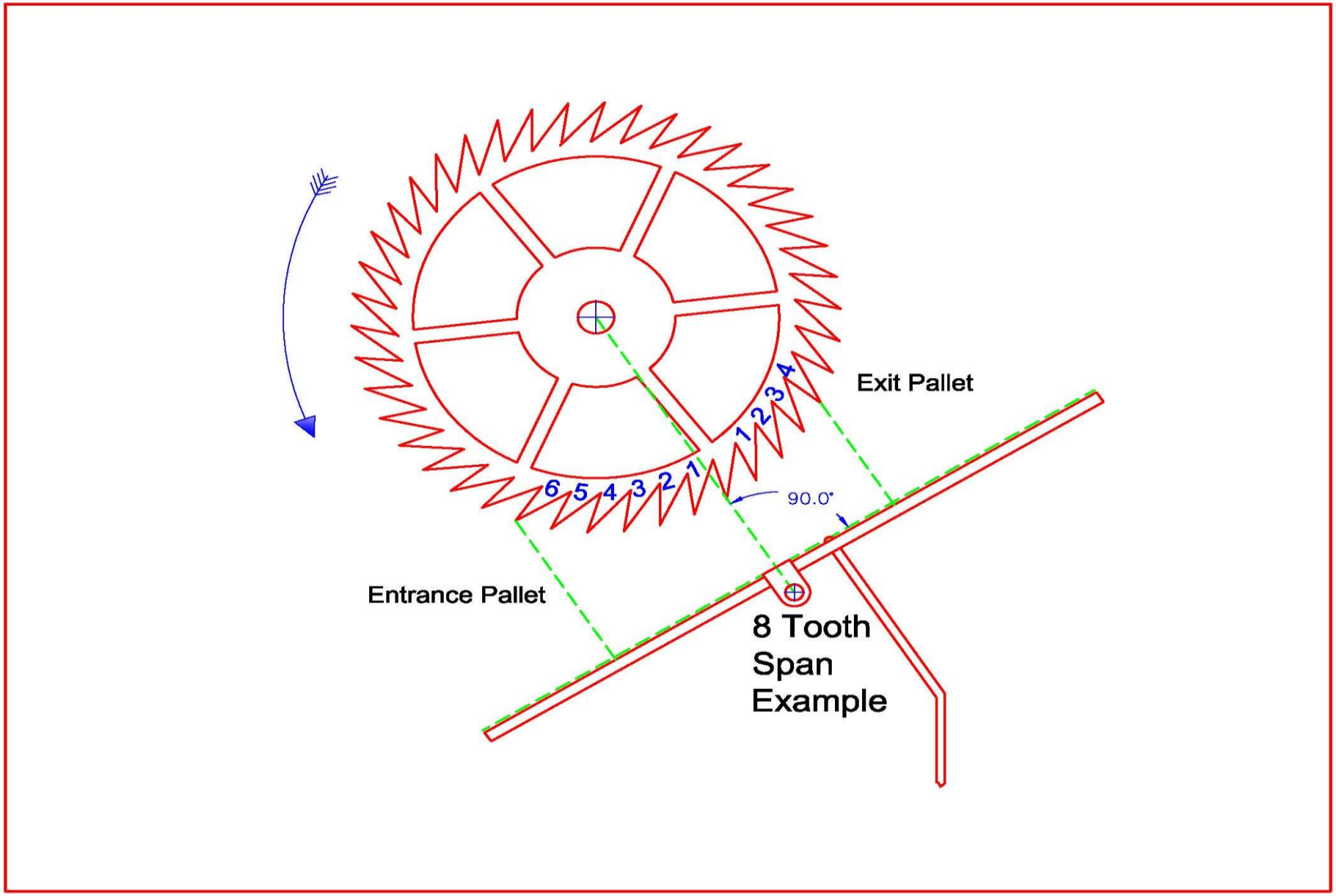

*Bending The Verge

(Example of eight tooth span)

* Bend exit pallet to 90 degrees counting over 4 teeth from pivot point on verge.
* Start bend on entrance pallet counting over 6 teeth from the verge pivot point.
* Bend to 17degrees.
* Bend radius to be the length of 1 1/2 tooth.

*Bending Verge

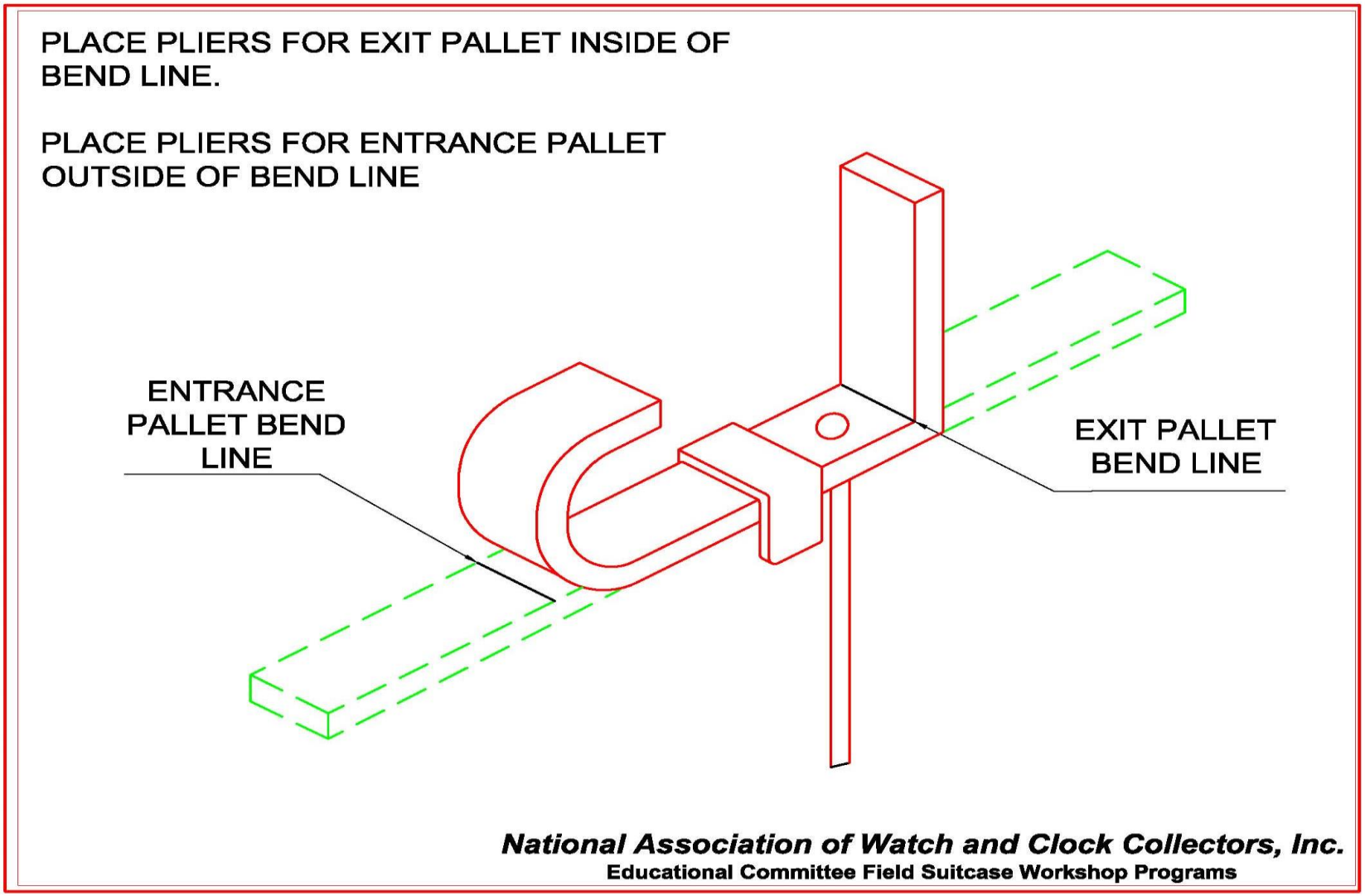

*The Recoil Escapement

"The Best Of J.C. Coleman" Page #365

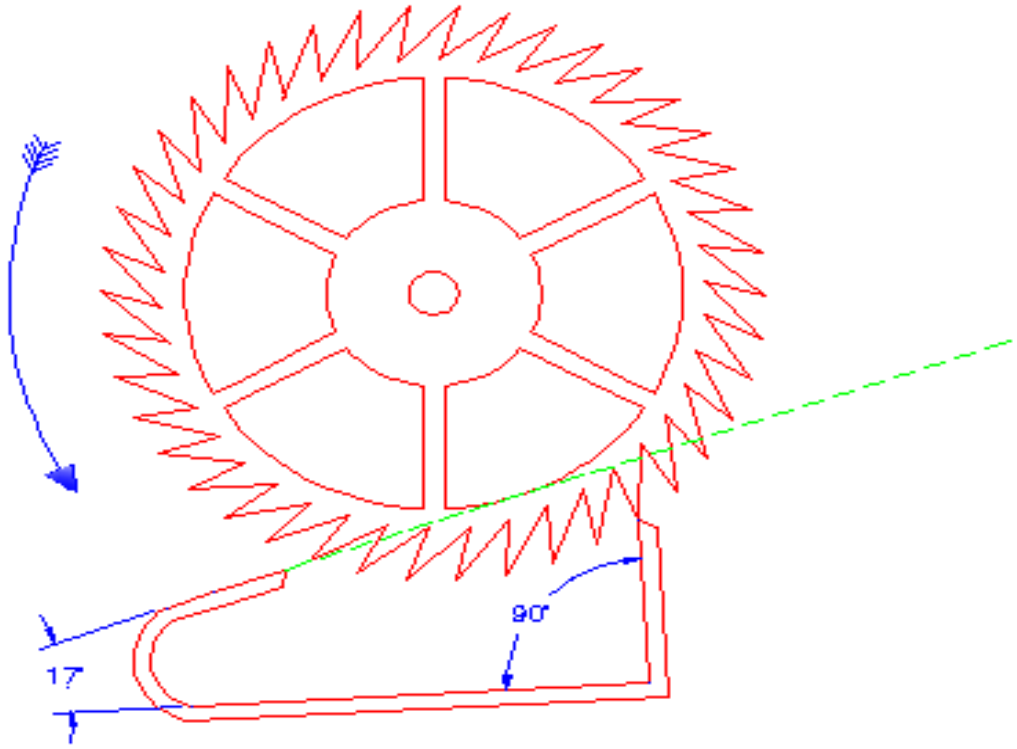

*Forming The Verge

* Cutting the exit pallet.
  * Lay a straight edge flat on the entrance pallet to find the length of the exit pallet.
  * Mark and cut with jewelers saw.
* Cutting entrance pallet.
  * Have the tip of the exit pallet touching the escape wheel tooth.
  * Count over the appropriate number of teeth, mark and cut.

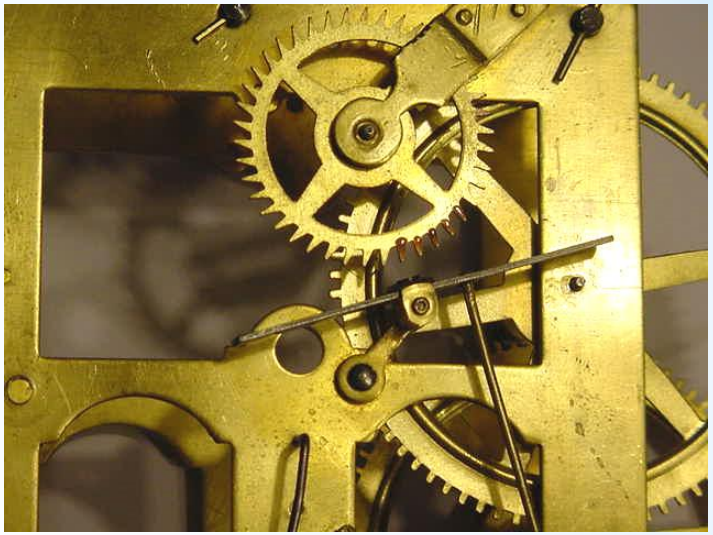

*Bending The Verge For A Span Of 8 Teeth

*Bending The Verge

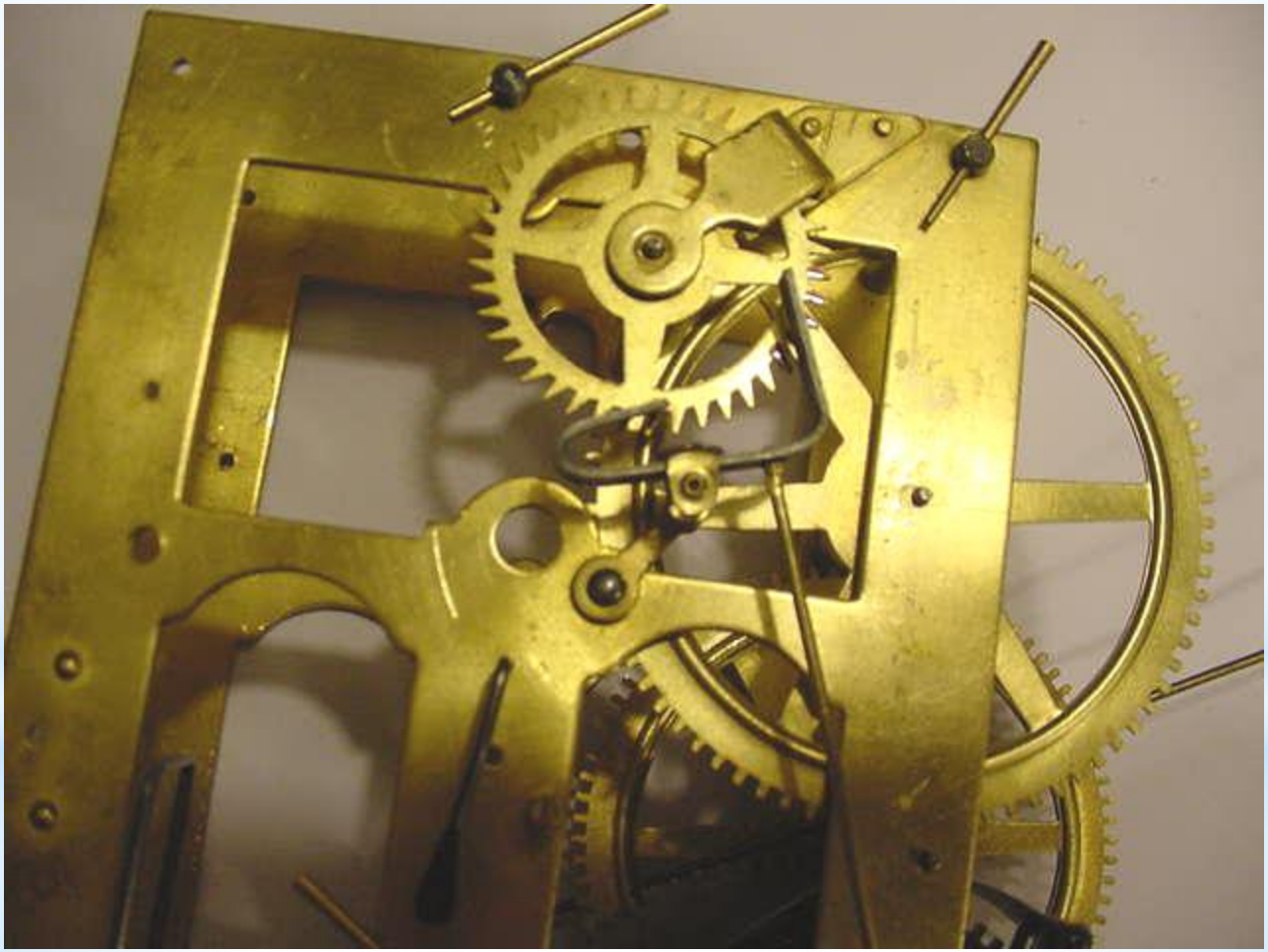

*Cutting The Verge

* Cutting length of pallets so it spans the number of teeth that you want.

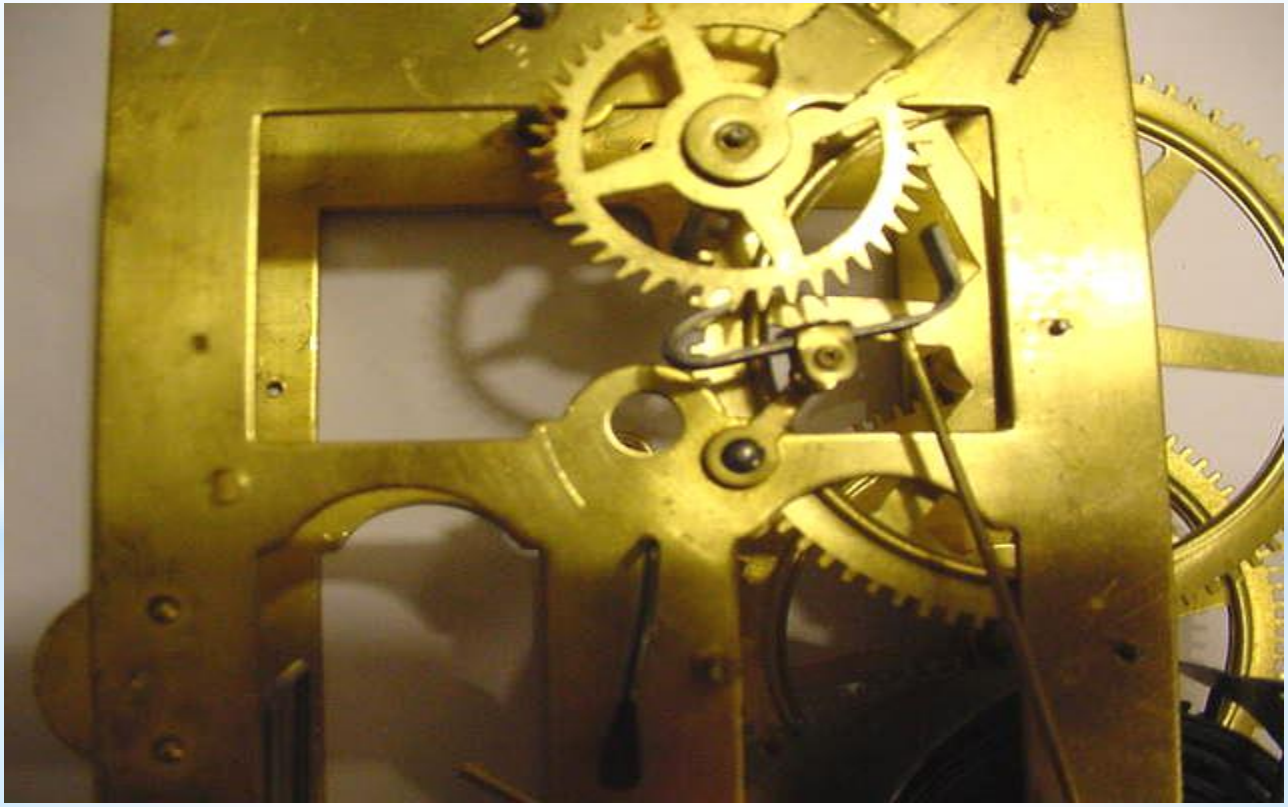

*Finishing The Verge

* Grind clearance on entrance pallet
  * 65 degrees + or – 5

* Grind clearance on exit pallet

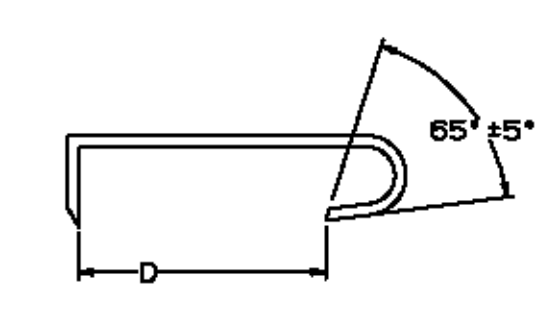

*Finishing The Verge

* Harden both pallets
  * Use a compound like boric acid to coat the pallet surfaces so they don’t burn.
  * Use some sort of heat sink to keep the middle part of the verge blank cool.
  * Use a torch to turn only the pallets to cherry red and quench in water.
  * Soften to a straw color.
  * Polish to a mirror finish.

*Finishing The Verge

*Adjust

Drop Adjustment

Entry Pallet is adjusted by changing the center distance*

Exit Pallet is adjusted by changing the distance between the two pallets.

*Center distance is the distance between the verge pivot and the escape wheel pivot.

* The Dead-Beat Escapement

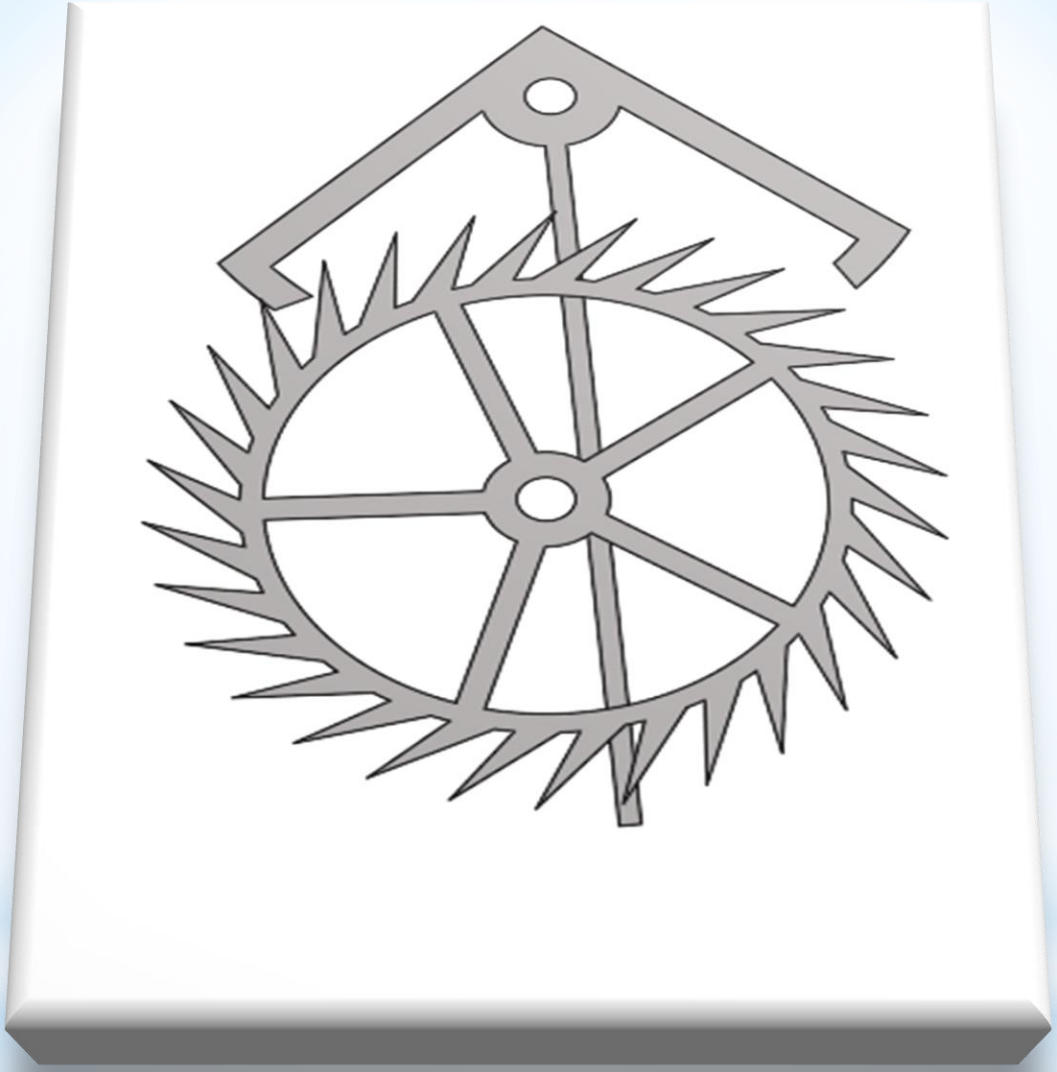

*The Deadbeat Escapement

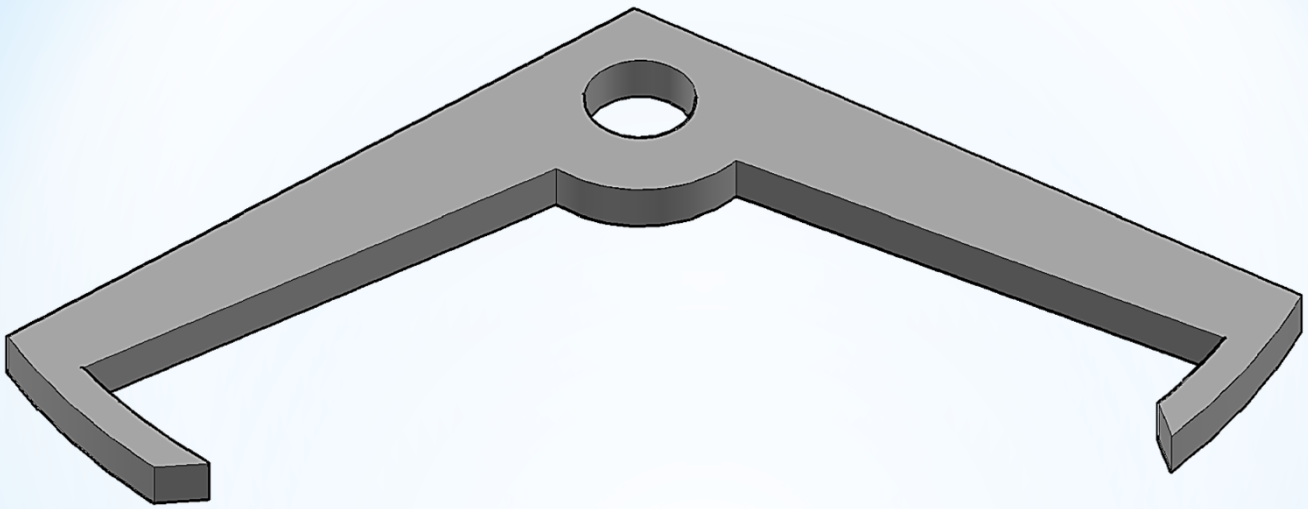

*History of the Dead-Beat

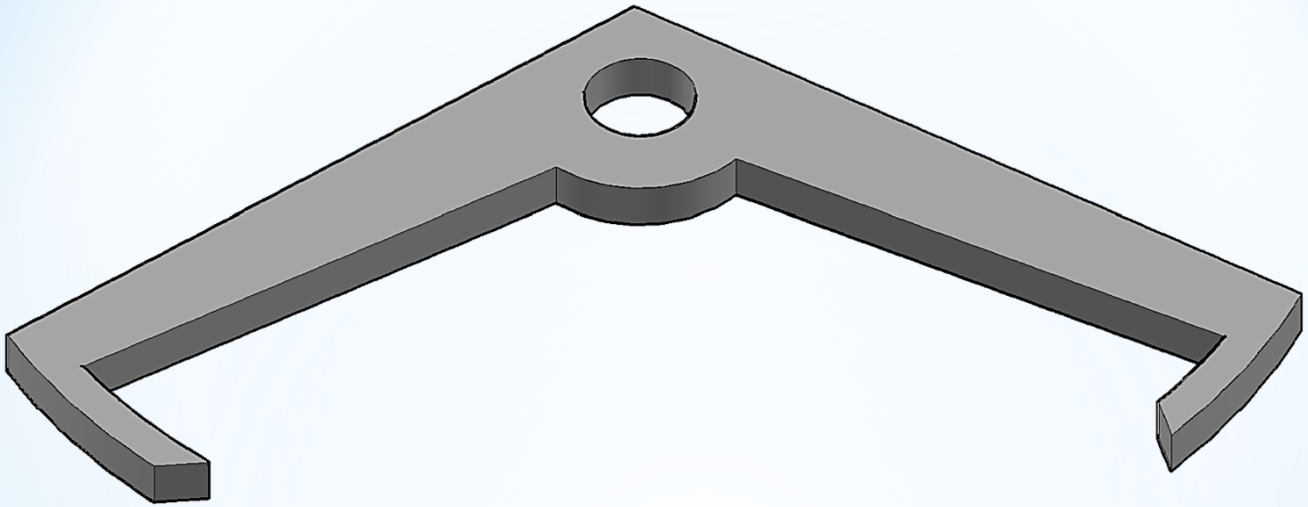

*How It Works

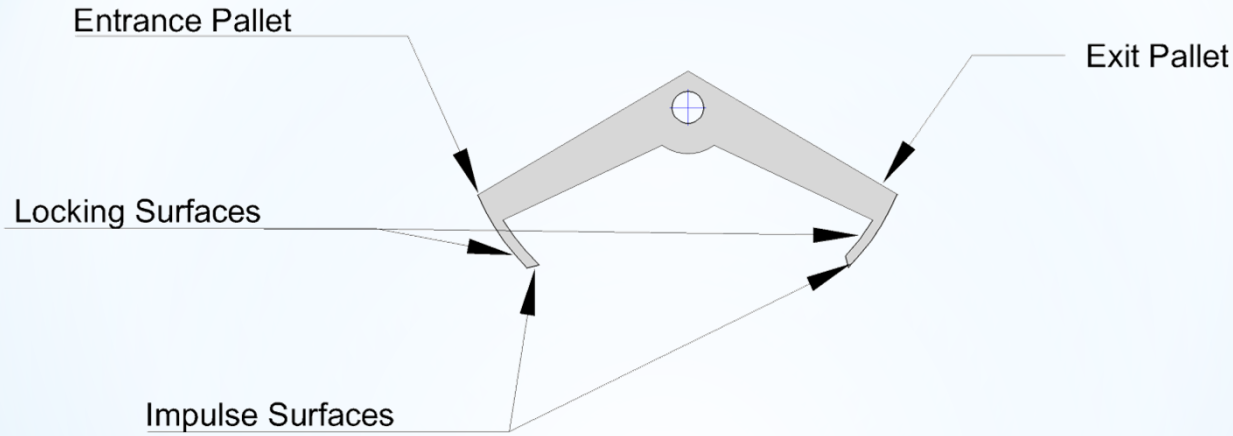

*Identification Of Surfaces

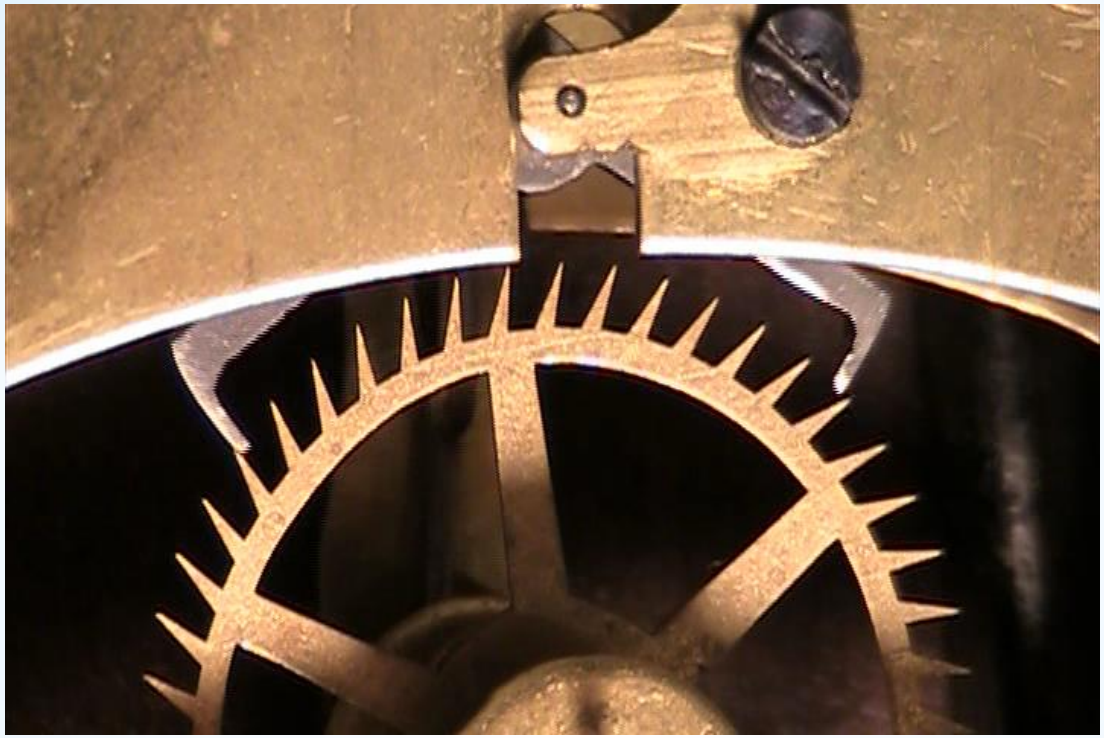

*Escapement In Motion

* The deadbeat verge has two additional faces on the pallets, called the 'locking' or 'dead' face, with a curved surface concentric with the axis on which the anchor rotates.
* When an escape wheel tooth is resting against one of these faces, its force is directed through the anchor's pivot axis, so it gives no impulse to the pendulum, allowing it to swing freely.
* When the pallet on the other side releases the escape wheel, a tooth lands on this "dead" face first, and remains resting lightly against it for most of the pendulum's outward swing and return.
* For this period the escape wheel is "locked" and unable to turn. Near the bottom of the pendulum's swing the tooth slides off the dead face onto the slanted 'impulse' face of the pallet, allowing the escape wheel to turn and give the pendulum a push, before dropping off the pallet.

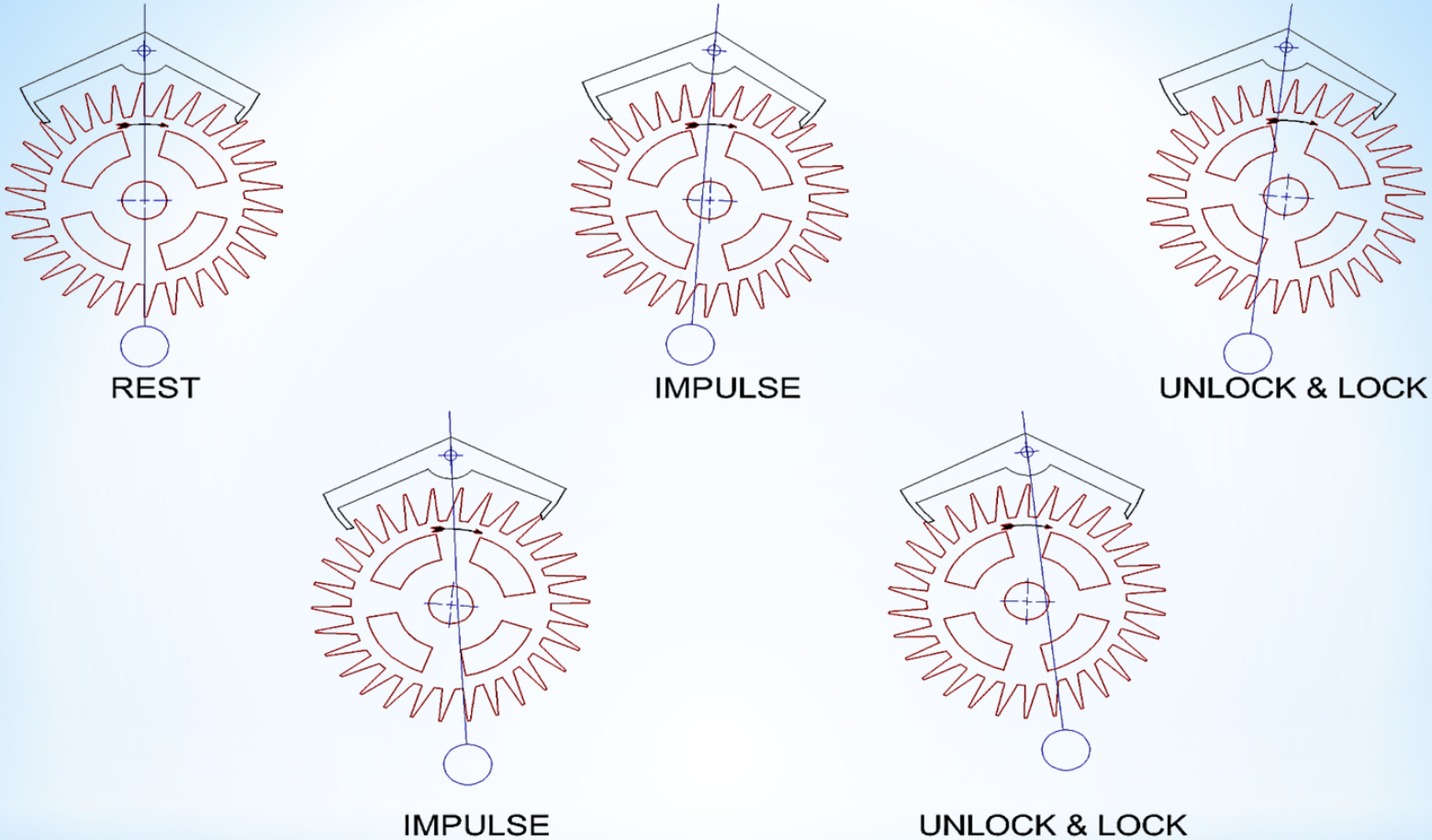

*Dead-Beat Sequence

*Impulse - Unlock - Lock

* Lift Angle (Impulse)

Lift Angle (Impulse Angle)

The action in which the escape wheel transfers energy into the pendulum by exerting force on the appropriate pallet face.

For most designs, this is 2 degrees. If the pendulum is heavy, it will be designed to 1 ½ degrees.

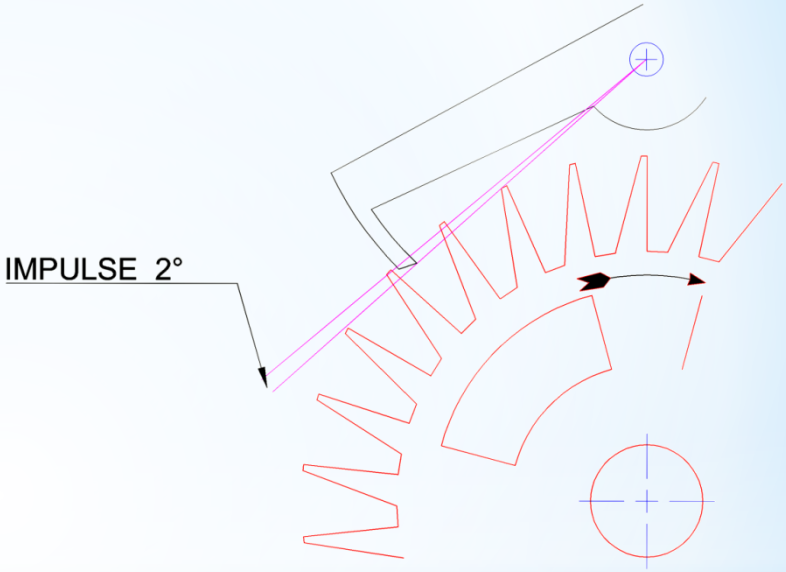

*Lock

Lock

The quantity of distance a wheel tooth, immediately after drop, overlaps the concentric dead-face of the pallet.

Kept to 1 degree or less.

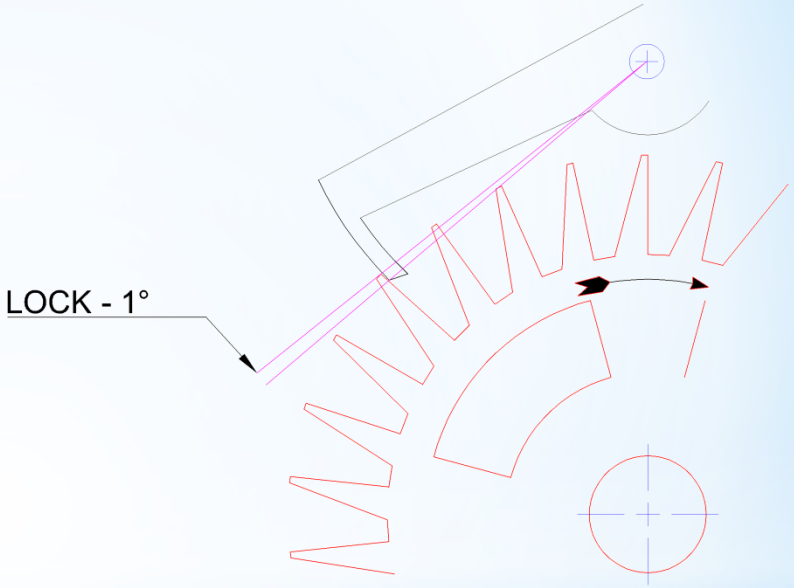

* Drop

Drop

The motion of the escape wheel through which the teeth move during a short period of detachment from both pallets. The only time the pendulum is “free”.

This should be 10 percent of the pitch (tooth to tooth distance).

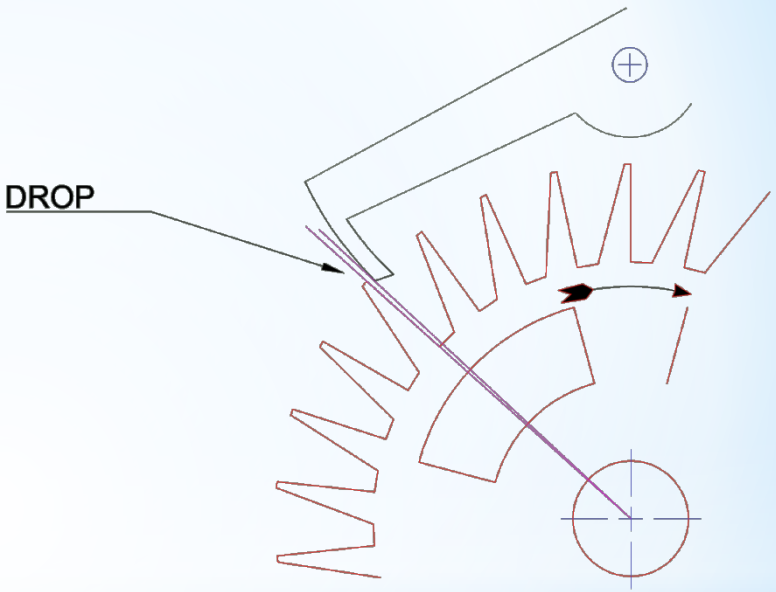

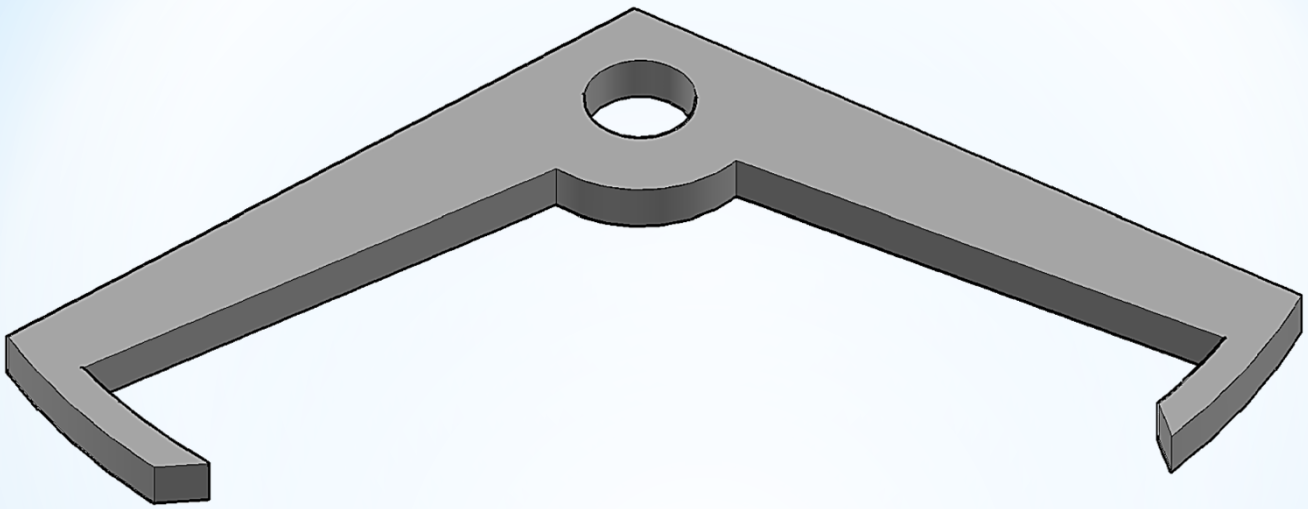

*Design of the Dead-Beat Escapement

Equal Arm Length

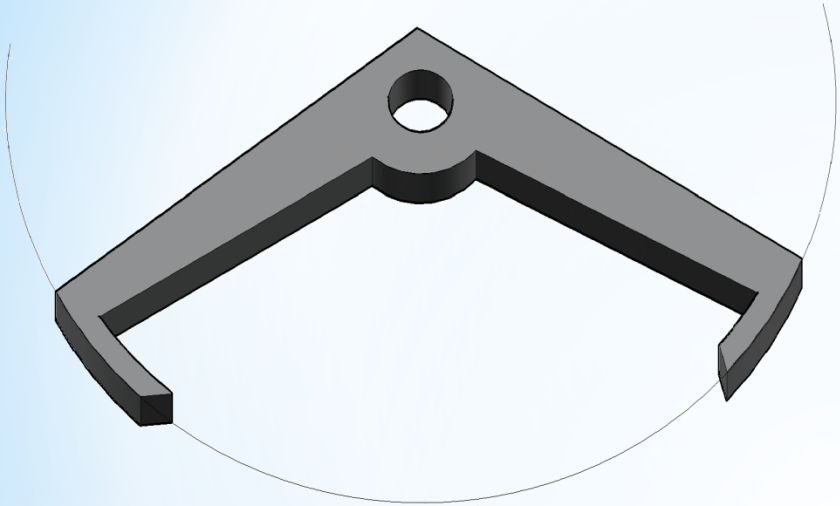

Unequal Arm Length

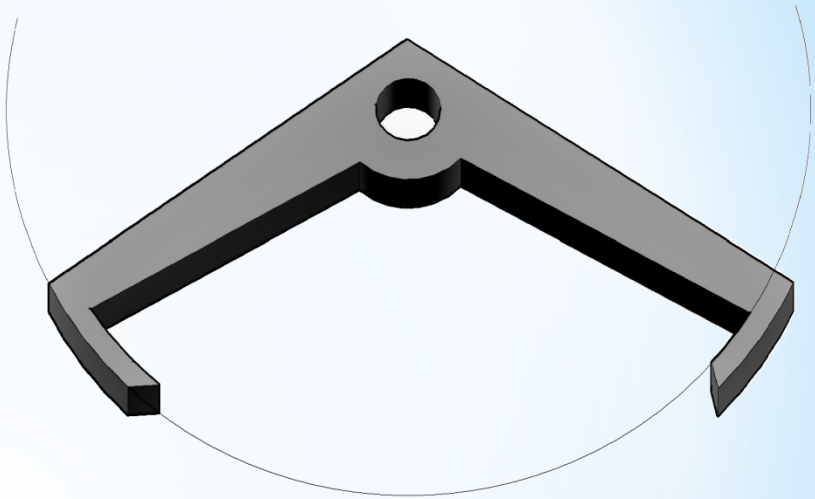

*Two Types Of Verges

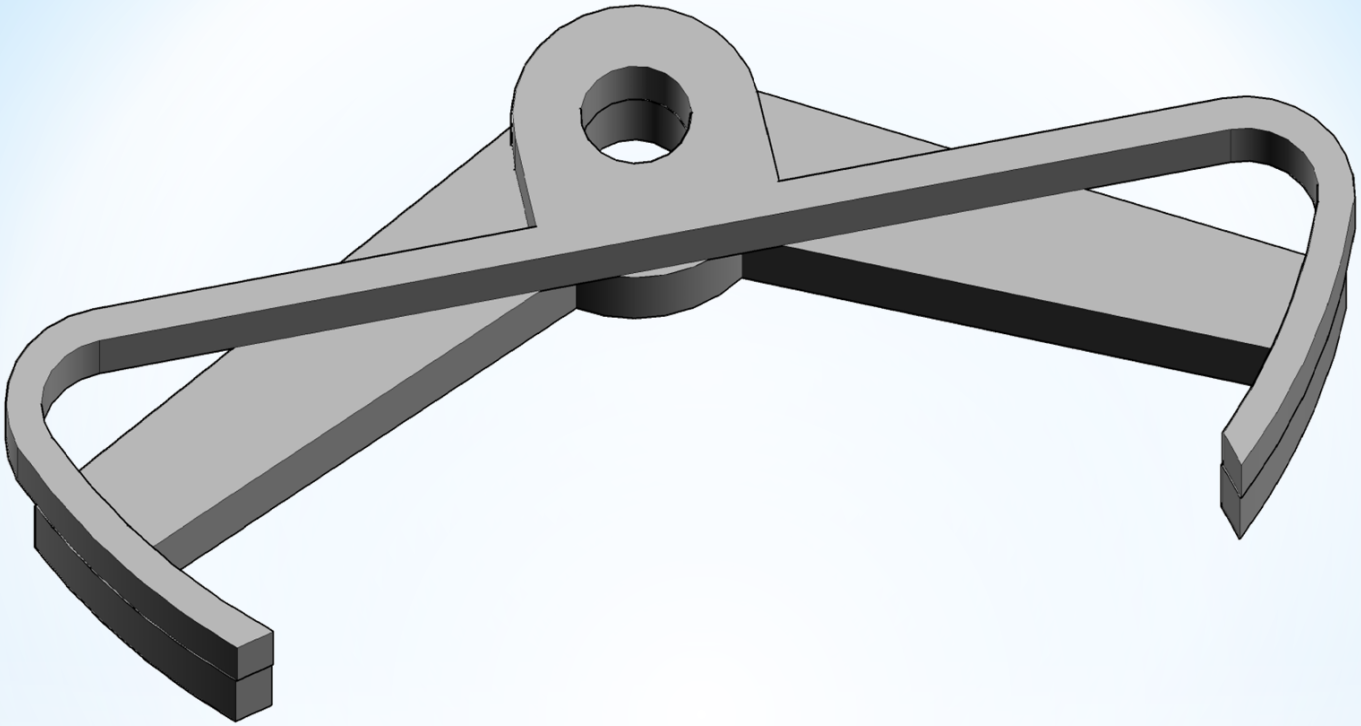

* Strip or Solid Verge

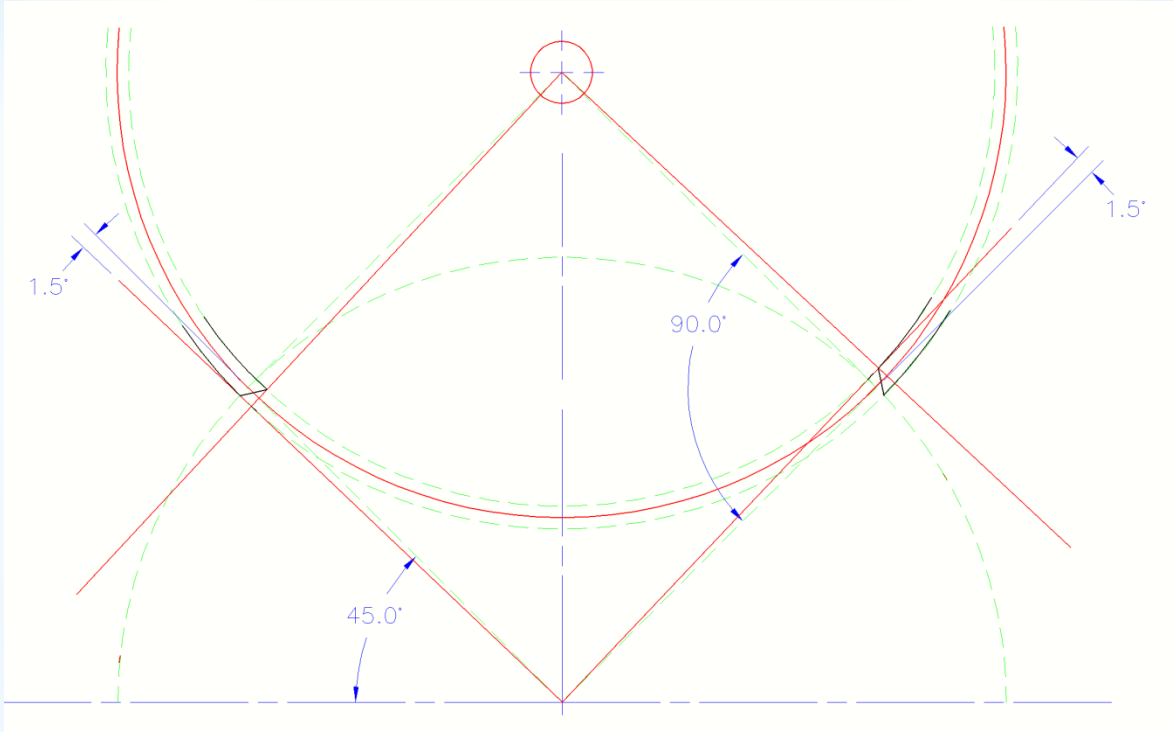

*A Simple Equal Arm Verge

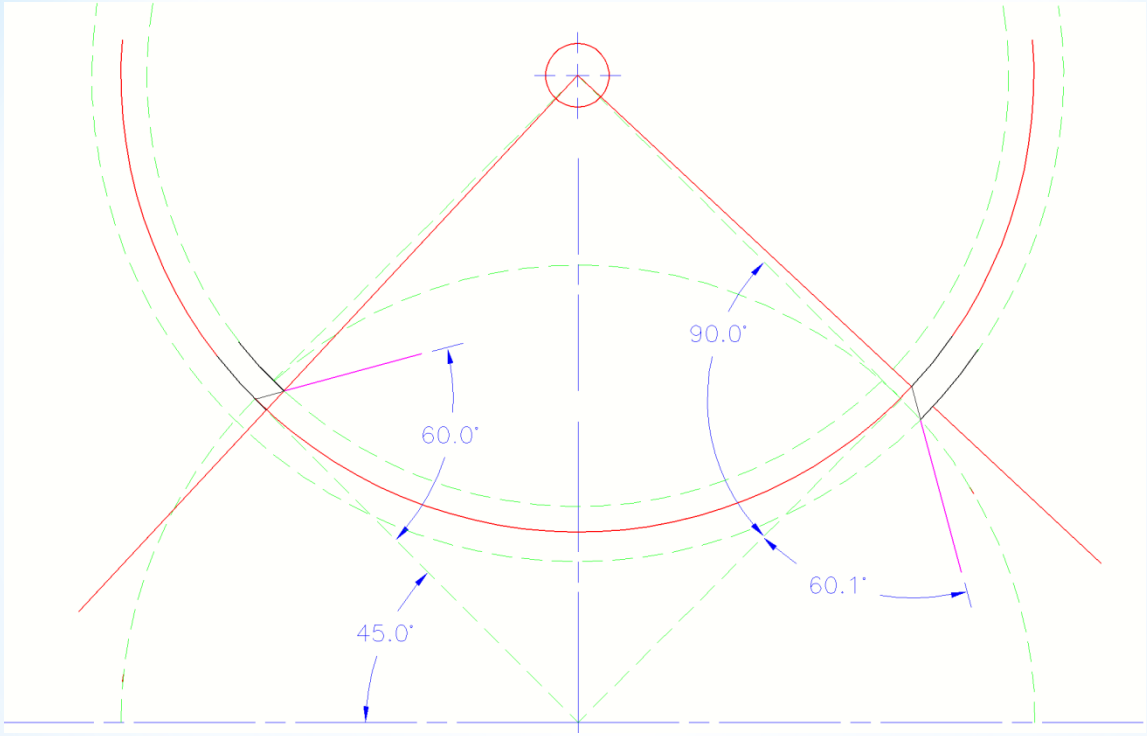

*A Simple Unequal Arm Length

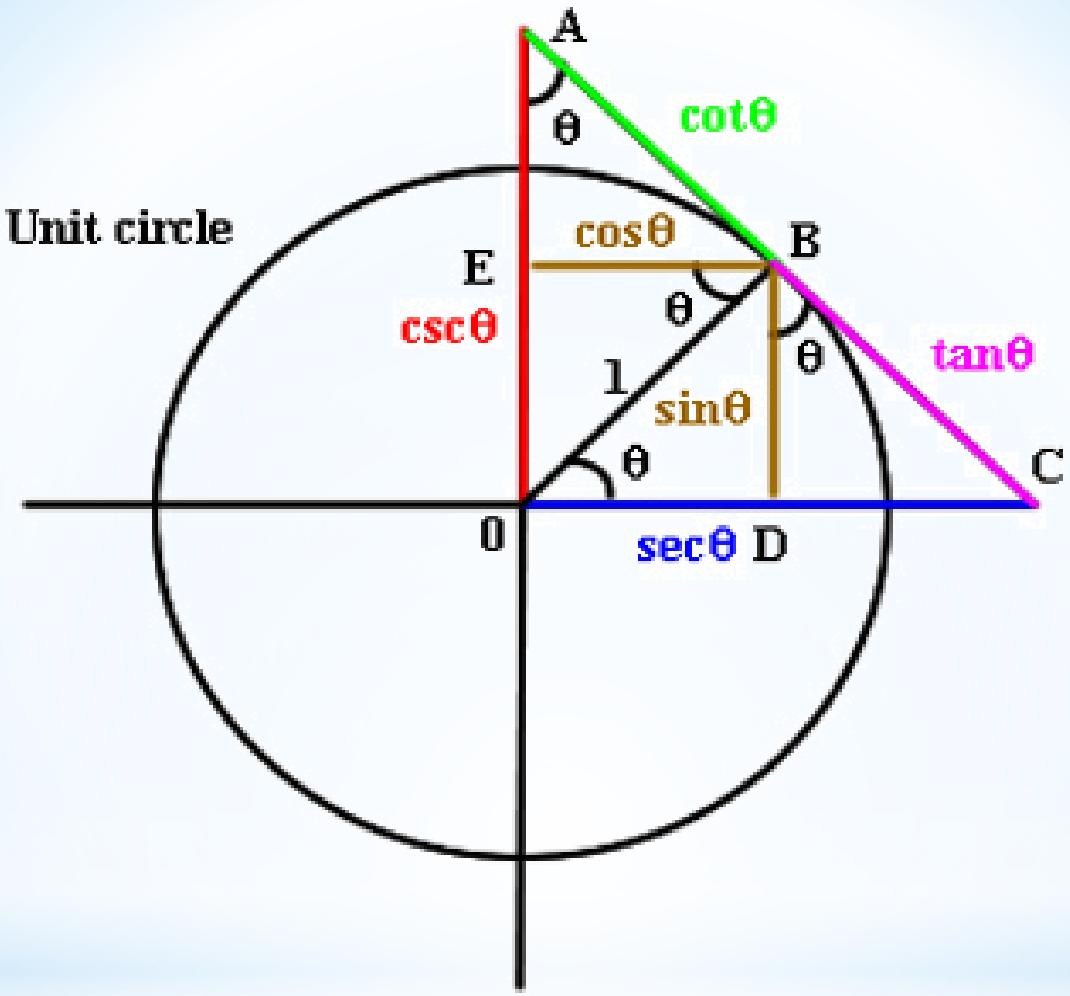

*Trigonometric Function Diagram

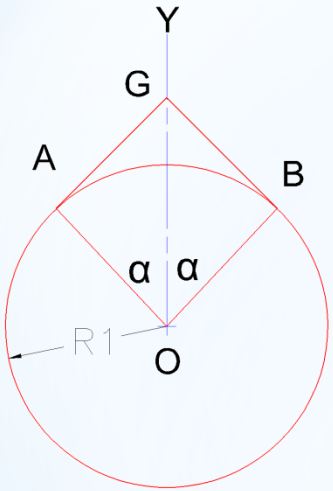

1. Radius R1 is the OD of the escape wheel drawn about its center.

2. Angle (AOB) is chosen to embrace a calculated number if escape wheel teeth.

3. Tangents (AG) and (BG) are constructed perpendicular to radius (OA) or (OB) at points (A) and (B).

4. Point (G) determines the location of the pallet arbor axis and the flex point on the pendulum.

5. Line (GO) is the center distance between the escape wheel and verge pivot points.

6. Angle (α) is the pallets semi-span angle.

*Basic Geometry Diagram

How many teeth will the verge span?
20 to 40 percent of the total number of teeth.

(Z= # of escape wheel teeth)(N= # of teeth spanned)

Calculations:			
Pallets semi-span angle (deg)	α	$\alpha = 180(N + .5)/Z$	
Center distance (in/mm)	GO	$G - O = R_1 \sec\alpha$	
Arc of Pendulum (end-to-end) (deg)	θ	2 x suppl arc (typ=1/2 deg)	$\theta = \phi + \lambda + (2\sup arc)$
Radius to mid-point of pallets (in/mm)	R_2	$R_2 = R_1 \tan\alpha$	
One angular tooth pitch (deg)	ρ	$\rho = 360/Z$	
Angular pallet thickness at Esc wheel circ (deg)	σ	$\sigma = (\rho/2) - \varepsilon$	
Half angular pallet thickness (deg)	τ	$\tau = \sigma/2$	
Pallet internal radius (in/mm)	R_3	$R_3 = R_2 - R_1 \sin\tau$	
Pallet external radius (in/mm)	R_4	$R_4 = R_2 + R_1 \sin\tau$	
Pallet thickness (in/mm)	T	$T = R_4 - R_3$	
Pallet impulse base angle (deg) (entry)	$ß_a$	$\beta a = \tan_{-1}[R_3 \sin\phi/(R_4 - R_3)]$	
Pallet impulse base angle (deg) (exit)	$ß_b$	$\beta b = \tan_{-1}[R4 \tan\phi/(R_4 - R_3)]$	
Pallet impulse base-circle radius (in/mm) (entry)	R_{5a}	$R_{5a} = R_4 \sin\beta_a$	
Pallet impulse base-circle radius (in/mm) (exit)	R_{5b}	$R_{5b} = R_3 \sin\beta_b$	
Pallet impulse base-circle radius (in/mm) (average)	R_{5avg}	$R_{5avg} = (R_{5a} + R_{5b})/2$	
Tooth front-slope angle (deg)	γ	$\gamma = (\rho/4) + 6°$	
Tooth back-slope angle (deg)	Ψ	$\psi = (\rho/4) + 18°$	
Tooth front-slope base-circle radius (in/mm)	R_6	$R_6 = R_1 \sin\gamma$	
Tooth back-slope base-circle radius (in/mm)	R_7	$R_7 = R_1 \sin\psi$	
Angle from mid-point of impulse faces to pallet arbor	μ	$\mu = \tan - 1(R_1/R_2)$	
Pallet Opening (in/mm)	X	$\sqrt{2(R_3R_3) - -2R_3R_3\cos(\mu - \lambda)}$	
Clearance - pallet to back of tooth (in/mm)	Z	$Z = (R_1 - R_3 \tan\lambda \tan\varepsilon) - R_3 \tan\lambda \tan\psi \cos\psi$	

*Formulas

TABLE OF NATURAL TRIGONOMETRIC FUNCTIONS

(Note: When entering tables with an angle larger than 45 select such angle from right hand side and obtain values in column corresponding to the function at *bottom* of page.)

Angle	Sin	Cos	Tan	Cot	Sec	Csc	
0°	.0000	1.0000	.0000	∞	1.000	∞	90°
1	.0174	.9998	.0175	57.29	1.000	57.30	89
2	.0349	.9994	.0349	28.64	1.001	28.65	88
3	.0523	.9986	.0524	19.08	1.001	19.11	87
4	.0698	.9976	.0699	14.30	1.002	14.34	86
5	.0872	.9962	.0875	11.43	1.004	11.47	85
6	.1045	.9945	.1051	9.514	1.006	9.567	84
7	.1219	.9925	.1228	8.144	1.008	8.206	83
8	.1392	.9903	.1405	7.115	1.010	7.185	82
9	.1564	.9877	.1584	6.314	1.012	6.392	81
10	.1736	.9848	.1763	5.671	1.015	5.759	80
11	.1908	.9816	.1944	5.145	1.019	5.241	79
12	.2079	.9781	.2126	4.705	1.022	4.810	78
13	.2250	.9744	.2309	4.331	1.026	4.445	77
14	.2419	.9703	.2493	4.011	1.031	4.134	76
15	.2588	.9659	.2679	3.732	1.035	3.864	75
16	.2756	.9613	.2867	3.487	1.040	3.628	74
17	.2924	.9563	.3057	3.271	1.046	3.420	73
18	.3090	.9511	.3249	3.078	1.051	3.236	72
19	.3256	.9455	.3443	2.904	1.058	3.072	71
20	.3420	.9397	.3640	2.747	1.064	2.924	70
21	.3584	.9336	.3839	2.605	1.071	2.790	69
22	.3746	.9272	.4040	2.475	1.079	2.669	68
23	.3907	.9205	.4245	2.356	1.086	2.559	67
24	.4067	.9135	.4452	2.246	1.095	2.459	66
25	.4226	.9063	.4663	2.145	1.103	2.366	65
26	.4384	.8988	.4877	2.050	1.113	2.281	64
27	.4540	.8910	.5095	1.963	1.122	2.203	63
28	.4695	.8829	.5317	1.881	1.133	2.130	62
29	.4848	.8746	.5543	1.804	1.143	2.063	61
30	.5000	.8660	.5774	1.732	1.155	2.000	60
31	.5150	.8572	.6009	1.664	1.167	1.942	59
32	.5299	.8480	.6249	1.600	1.179	1.887	58
33	.5446	.8387	.6494	1.540	1.192	1.836	57
34	.5592	.8290	.6745	1.483	1.206	1.788	56
35	.5736	.8192	.7002	1.428	1.221	1.743	55
36	.5878	.8090	.7265	1.376	1.236	1.701	54
37	.6018	.7986	.7536	1.327	1.252	1.662	53
38	.6157	.7880	.7813	1.280	1.269	1.624	52
39	.6293	.7771	.8098	1.235	1.287	1.589	51
40	.6428	.7660	.8391	1.192	1.305	1.556	50
41	.6561	.7547	.8693	1.150	1.325	1.524	49
42	.6691	.7431	.9004	1.111	1.346	1.494	48
43	.6820	.7314	.9325	1.072	1.367	1.466	47
44	.6947	.7193	.9657	1.036	1.390	1.440	46
45	.7071	.7071	1.0000	1.000	1.414	1.414	45
	Cos	Sin	Cot	Tan	Csc	Sec	Angle

(Z= # of escape wheel teeth)(N= # of teeth spanned)

Z	(N +.5)	ANGLE	Z	(N +.5)	ANGLE
15	2.5	30	15	4.5	54
45	7.5	30	45	13.5	54
60	10.5	31.5	60	18.5	55.5
30	5.5	33	30	9.5	57
45	8.5	34	45	14.5	58
60	11.5	69	60	19.5	58.5
60	12.5	37.5	60	20.5	61.5
45	9.5	38	45	15.5	62
30	6.5	39	30	10.5	63
60	13.5	40.5	60	21.2	64.5
15	3.5	42	15	5.5	66
45	10.5	42	45	16.5	66
60	14.5	43.5	60	22.5	67.5
30	7.5	45	30	11.5	69
45	11.5	46	45	17.5	70
60	15.5	46.5	60	23.5	70.5
60	16.5	49.5	60	24.5	73.5
45	12.5	50	45	18.5	74
30	8.5	51	30	12.5	75
60	17.5	52.5	60	25.5	76.5

*Values of Angles (α) for Escape Wheels

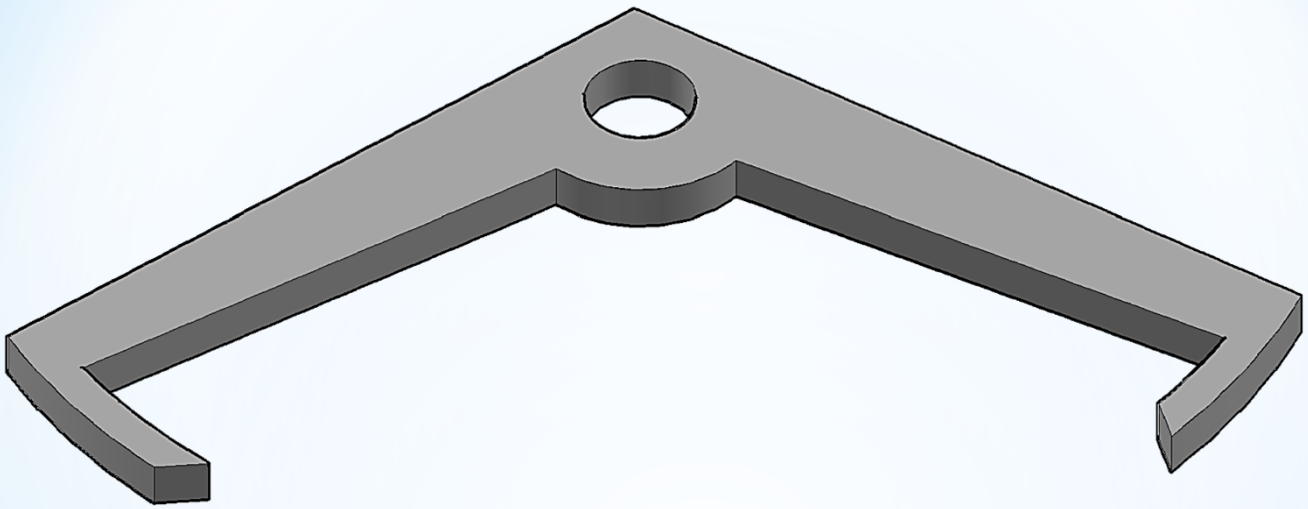

*Drawing the Dead-Beat Escapement

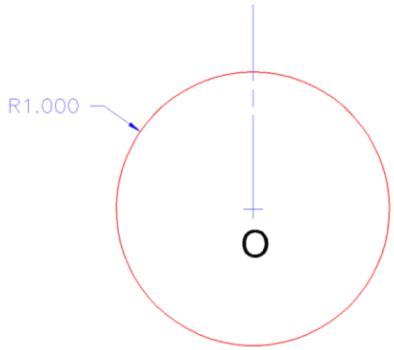

Draw a circle with a radius of 1" and a line from its center vertically.

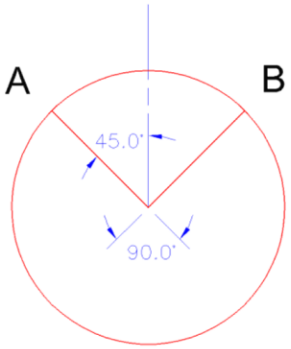

1. Draw radii from "O", 45° showing the amount the escape wheel teeth the pallets will span.

*Drawing unequal arm length.

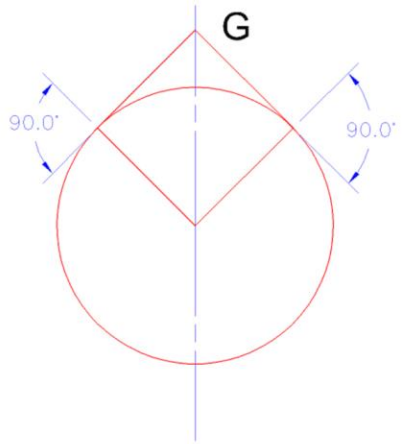

Tangents showing the pallet center distance.

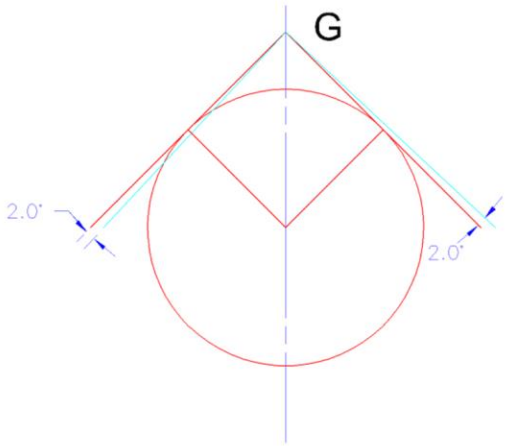

2° lift angle on the entrance and exit pallets from point "G"

*Drawing unequal arm length

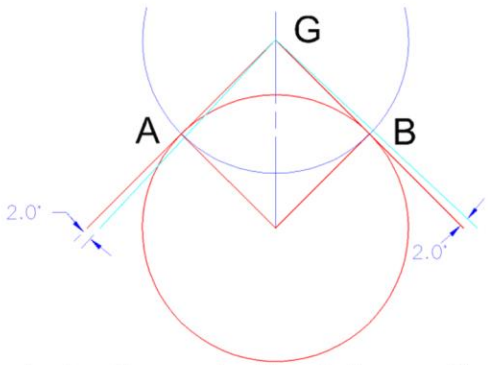

A circle, through the intersection of the tangents "A" and "B" using center "G". This circle represents the lock faces of the entrance and exit pallets.

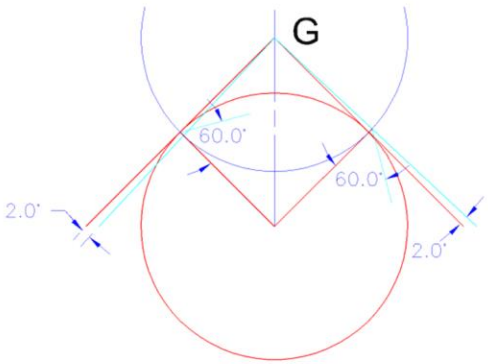

Draw the lifting planes at an angle of 60°from the radii.

*Drawing unequal arm length

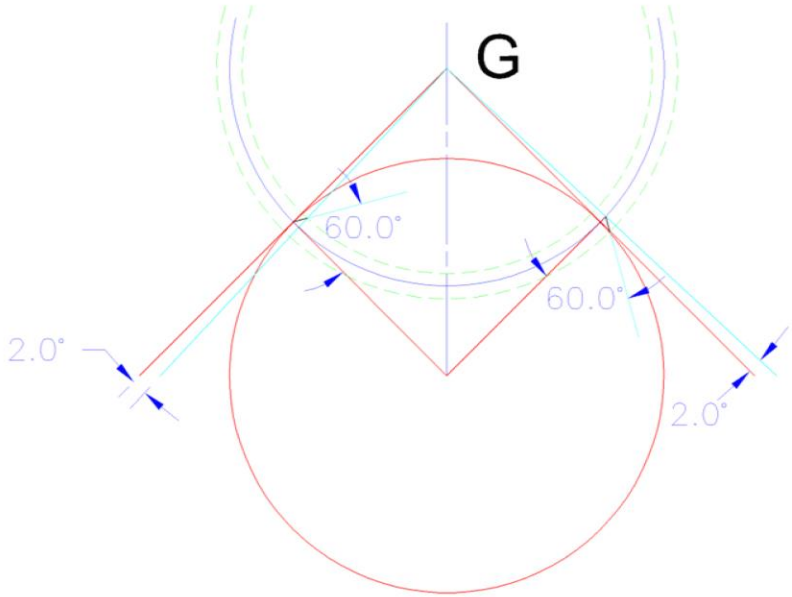

The pallets are finished by drawing an arc from where the lifting plane intersects the reference line on the entrance pallet and where the lifting plane intersects the tangent line on the exit pallet.

*Drawing unequal arm length

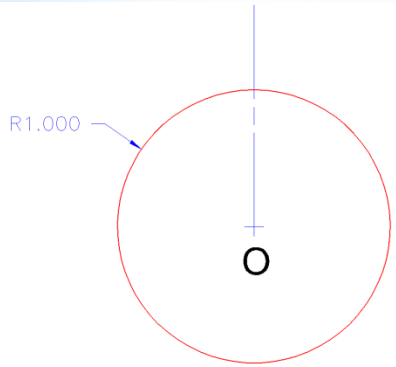

Draw a circle with a radius of 1" and a line from its center vertically.

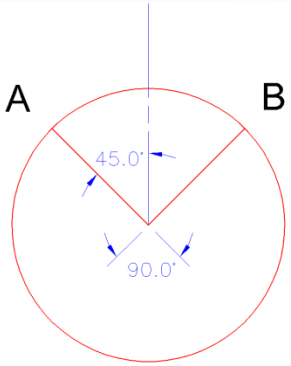

1. Draw radii from "O", 45° showing the amount the escape wheel teeth the pallets will span.

*Drawing equal arm length

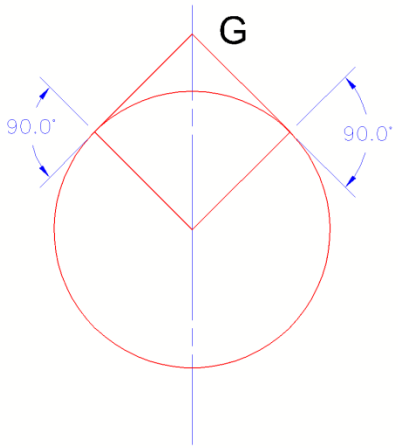

Tangents showing the pallet center distance.

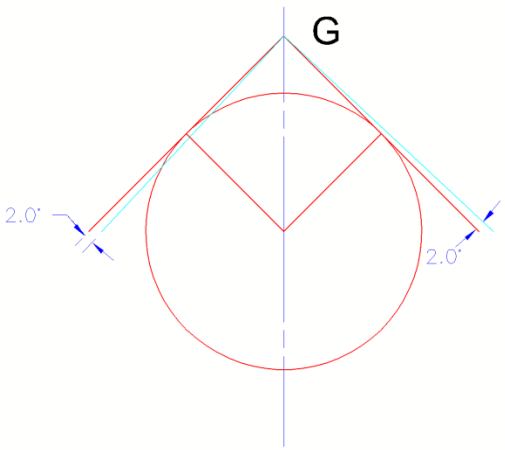

2° lift angle on the entrance and exit pallets from point "G".

*Drawing equal arm length

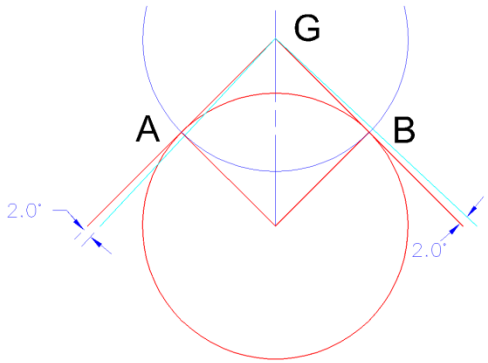

A circle, through the intersection of the tangents "A" and "B" using center "G". This circle represents the center of the entrance and exit pallets.

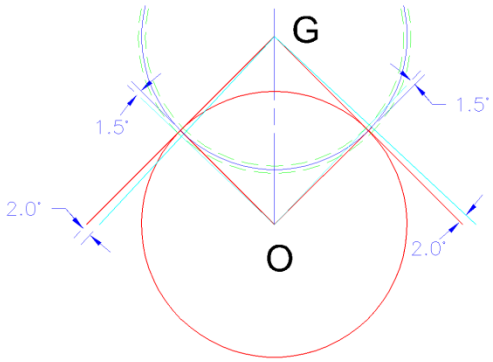

Two circles are drawn representing the lock faces of the pallets 1.5° from radii "O".

*Drawing equal arm length

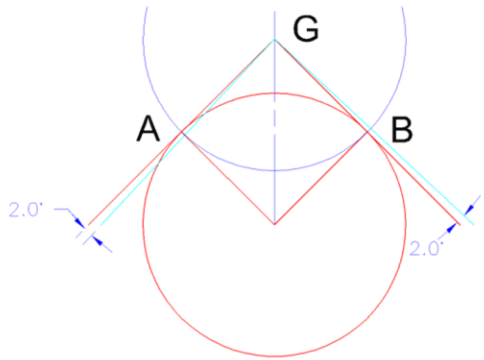

A circle, through the intersection of the tangents "A" and "B" using center "G". This circle represents the center of the entrance and exit pallets.

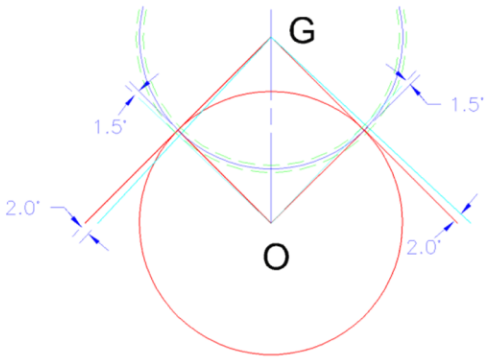

Two circles are drawn representing the lock faces of the pallets 1.5° from radii "O".

*Drawing equal arm length

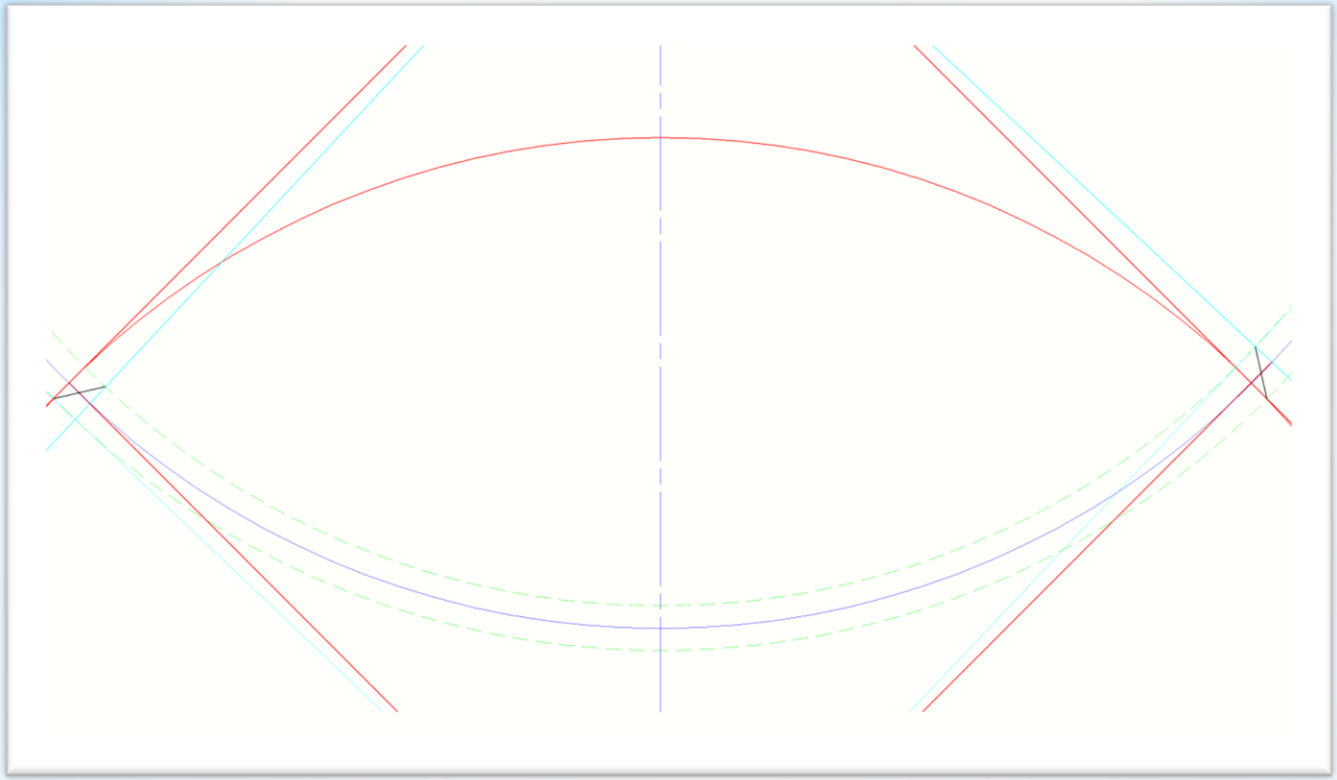

*Drawing equal arm length

Escape Wheel Diameter (in/mm)		2xR1
1.7830		
No Escape Wheel Teeth	Z	
44		
No Teeth spanned (Whole No)		N
10		
Pendulum impulse angle (deg)		Φ
2.0000		
Angular Lock (deg)		1.0000
Angular drop (deg)		1.0000

*New Project-Missing Verge

(Z= # of escape wheel teeth)(N= # of teeth spanned)

Calculations:			
Pallets semi-span angle (deg)	α	$\alpha = 180(N + .5)/Z$	
Center distance (in/mm)	GO	$G - O = R_1 \sec\alpha$	
Arc of Pendulum (end-to-end) (deg)	θ	2 x suppl arc (typ=1/2 deg)	$\theta = \phi + \lambda + (2\sup arc)$
Radius to mid-point of pallets (in/mm)	R_2	$R_2 = R_1 \tan\alpha$	
One angular tooth pitch (deg)	ρ	$\rho = 360/Z$	
Angular pallet thickness at Esc wheel circ (deg)	σ	$\sigma = (\rho/2) - \varepsilon$	
Half angular pallet thickness (deg)	τ	$\tau = \sigma/2$	
Pallet internal radius (in/mm)	R_3	$R_3 = R_2 - R_1 \sin\tau$	
Pallet external radius (in/mm)	R_4	$R_4 = R_2 + R_1 \sin\tau$	
Pallet thickness (in/mm)	T	$T = R_4 - R_3$	
Pallet impulse base angle (deg) (entry)	$ß_a$	$\beta a = \tan_{-1}[R_3 \sin\phi/(R_4 - R_3)]$	
Pallet impulse base angle (deg) (exit)	$ß_b$	$\beta b = \tan_{-1}[R4 \tan\phi/(R_4 - R_3)]$	
Pallet impulse base-circle radius (in/mm) (entry)	R_{5a}	$R_{5a} = R_4 \sin\beta_a$	
Pallet impulse base-circle radius (in/mm) (exit)	R_{5b}	$R_{5b} = R_3 \sin\beta_b$	
Pallet impulse base-circle radius (in/mm) (average)	R_{5avg}	$R_{5avg} = (R_{5a} + R_{5b})/2$	
Tooth front-slope angle (deg)	γ	$\gamma = (\rho/4) + 6°$	
Tooth back-slope angle (deg)	Ψ	$\psi = (\rho/4) + 18°$	
Tooth front-slope base-circle radius (in/mm)	R_6	$R_6 = R_1 \sin\gamma$	
Tooth back-slope base-circle radius (in/mm)	R_7	$R_7 = R_1 \sin\psi$	
Angle from mid-point of impulse faces to pallet arbor	μ	$\mu = \tan - 1(R_1/R_2)$	
Pallet Opening (in/mm)	X	$\sqrt{2(R_3R_3) - -2R_3R_3\cos(\mu - \lambda)}$	
Clearance - pallet to back of tooth (in/mm)	Z	$Z = (R_1 - R_3 \tan\lambda \tan\varepsilon) - R_3 \tan\lambda \tan\psi \cos\psi$	

*Formulas

(Z= # of escape wheel teeth)(N= # of teeth spanned) (Lift angle of 2 degrees)

* Pallets semi-span angle (deg)	α	42.9545	
* Center distance (in/mm) GO	1.2181		
* Arc of Pendulum (end-to-end) (deg)	θ	3.0000	
* Radius to mid-point of pallets (in/mm)	R2	0.8300	
* One angular tooth pitch (deg)	ρ	8.1818	
* Angular pallet thickness at Esc wheel circ (deg)		σ	3.0909
* Half angular pallet thickness (deg)	τ	1.5455	
* Pallet internal radius (in/mm)	R3	0.8060	
* Pallet external radius (in/mm)	R4	0.8541	
* Pallet thickness (in/mm) T	0.0481		
* Pallet impulse base angle (deg) (entry)	ßa	30.3248	
* Pallet impulse base angle (deg) (exit)	ßb	31.8077	
* Pallet impulse base-circle radius (in/mm) (entry)		R5a	0.4312
* Pallet impulse base-circle radius (in/mm) (exit)		R5b	0.4248
* Pallet impulse base-circle radius (in/mm) (average)		R5avg	0.4280
* Tooth front-slope angle (deg)	γ	8.0455	
* Tooth back-slope angle (deg)	Ψ	20.0455	
* Tooth front-slope base-circle radius (in/mm)		R6	0.1248
* Tooth back-slope base-circle radius (in/mm)		R7	0.3056
* Angle from mid-point of impulse faces to pallet arbor		μ	94.0909
* Pallet Opening (in/mm) X	1.1701		
* Clearance - pallet to back of tooth (in/mm)	Z	0.009565695	

*Calculated Answers

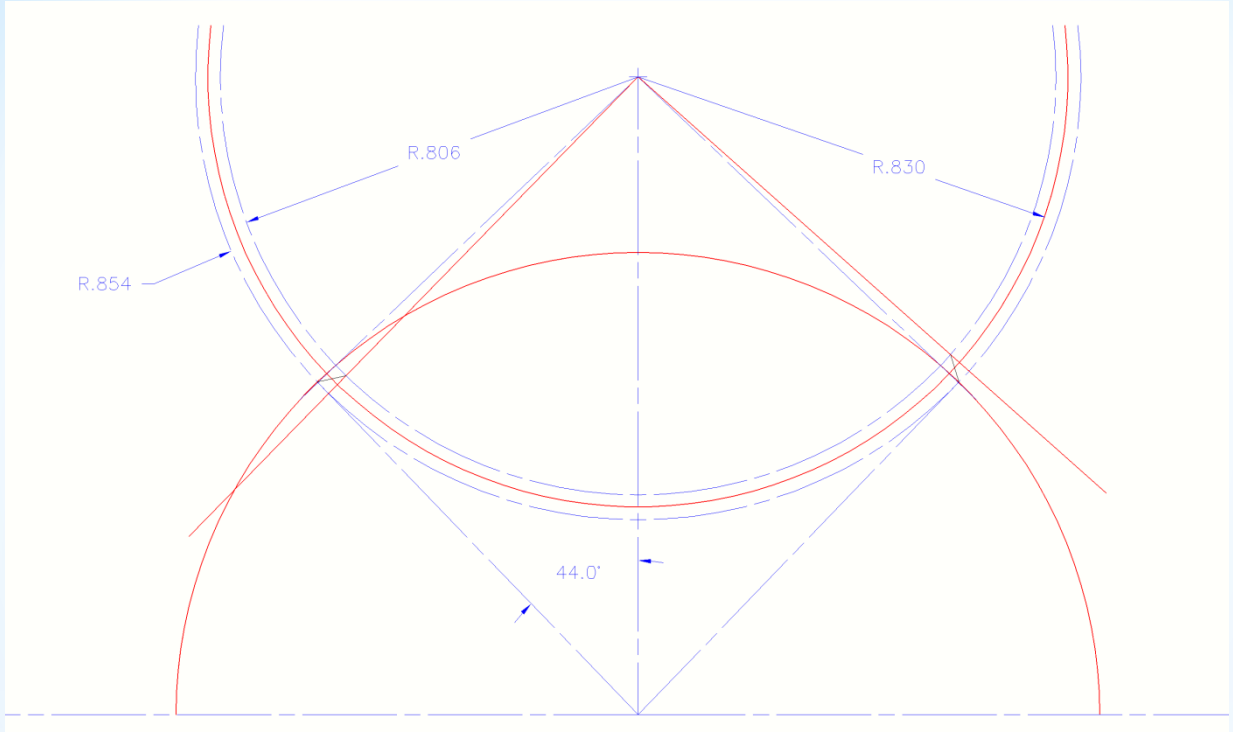

*Missing Verge Drawing

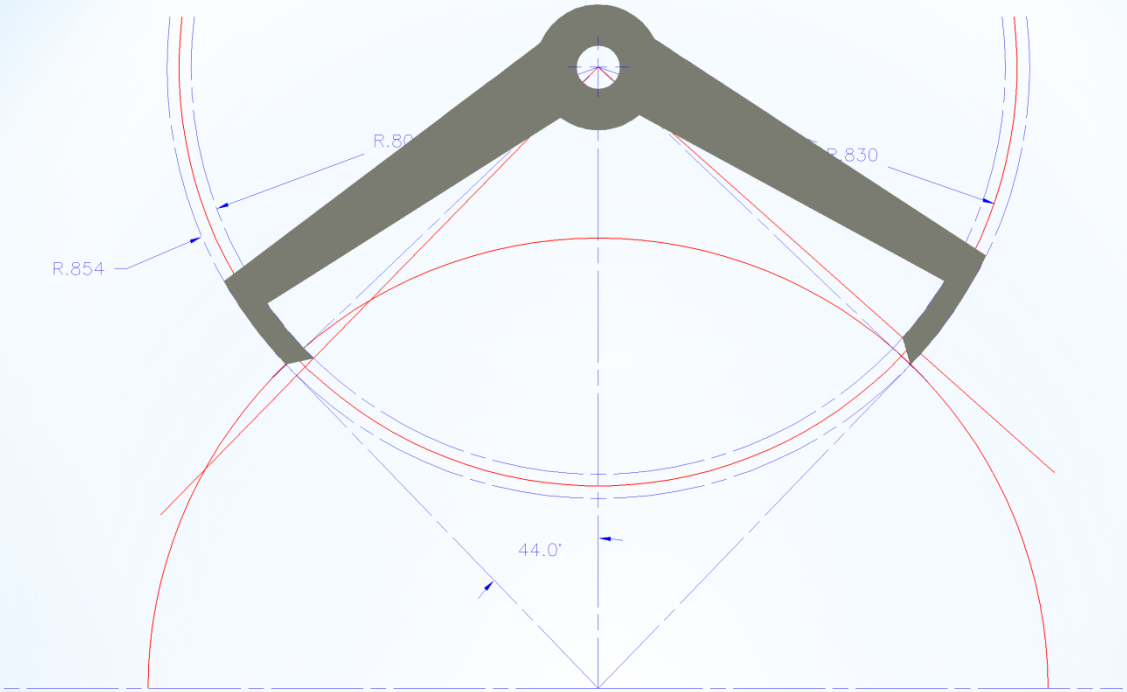

*Drawing the Verge Body

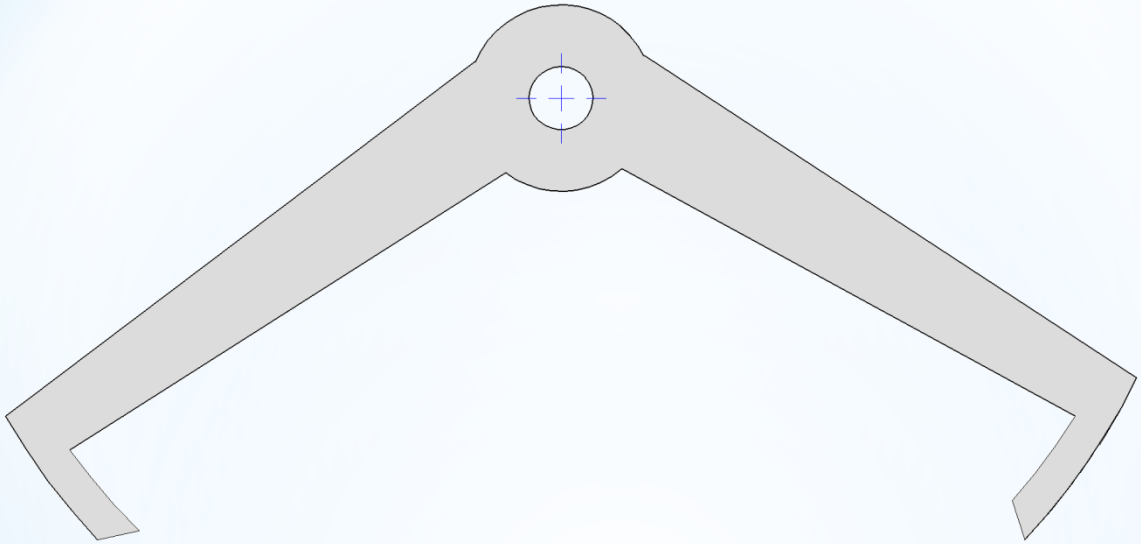

*Finished!

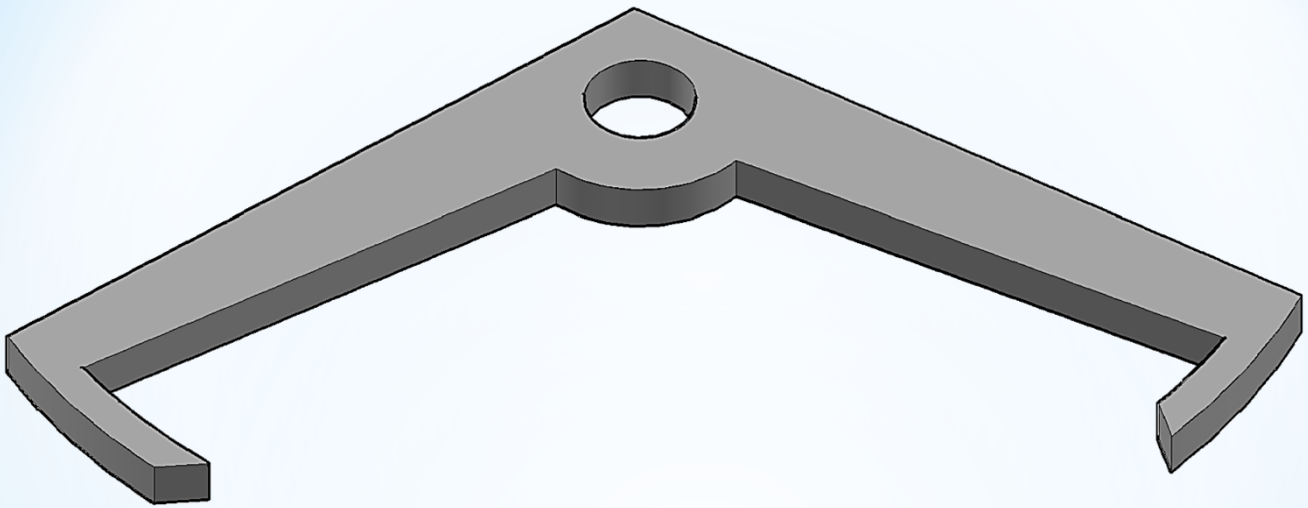

*Making the Verge

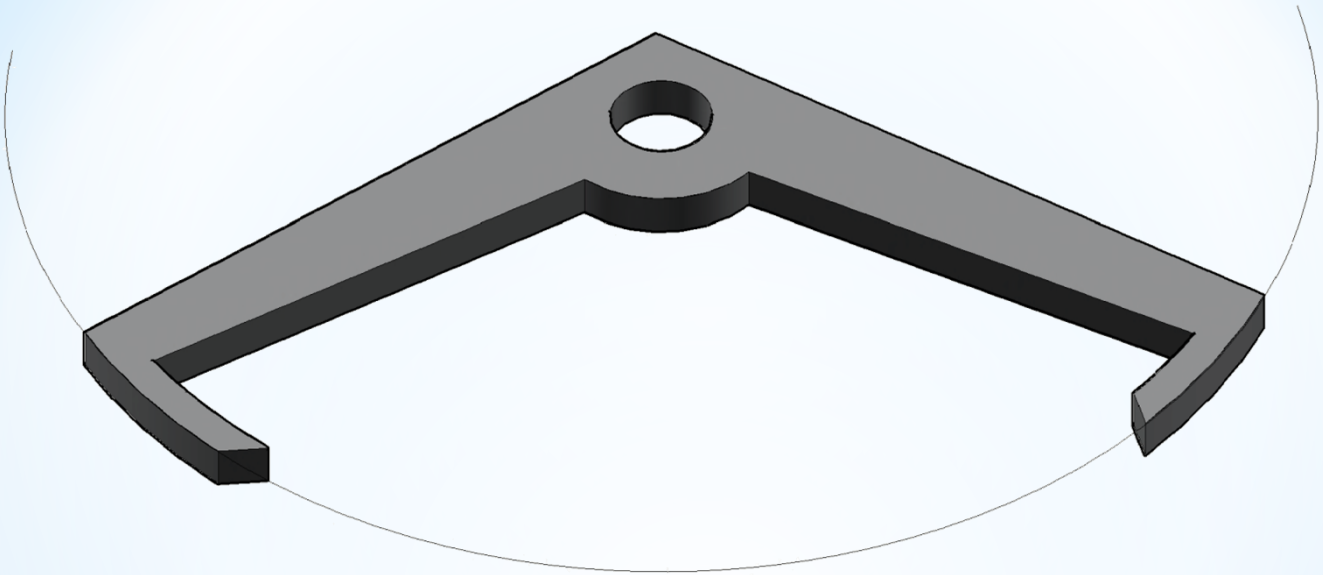

*Equal Arm Length

*Simple Procedure

* 1. Draw the verge.
  * Measure the inner and outer diameters and the reference circle of the verge.
* 2. Cut out the verge.
* 3. Glue the paper to the tool steel and let dry.
* 4. Using and jewelers saw and saw block, saw out the verge staying OUTSIDE the lines.
* 5. Machine to specifications.
* 6. Put into the clock and make your adjustments.

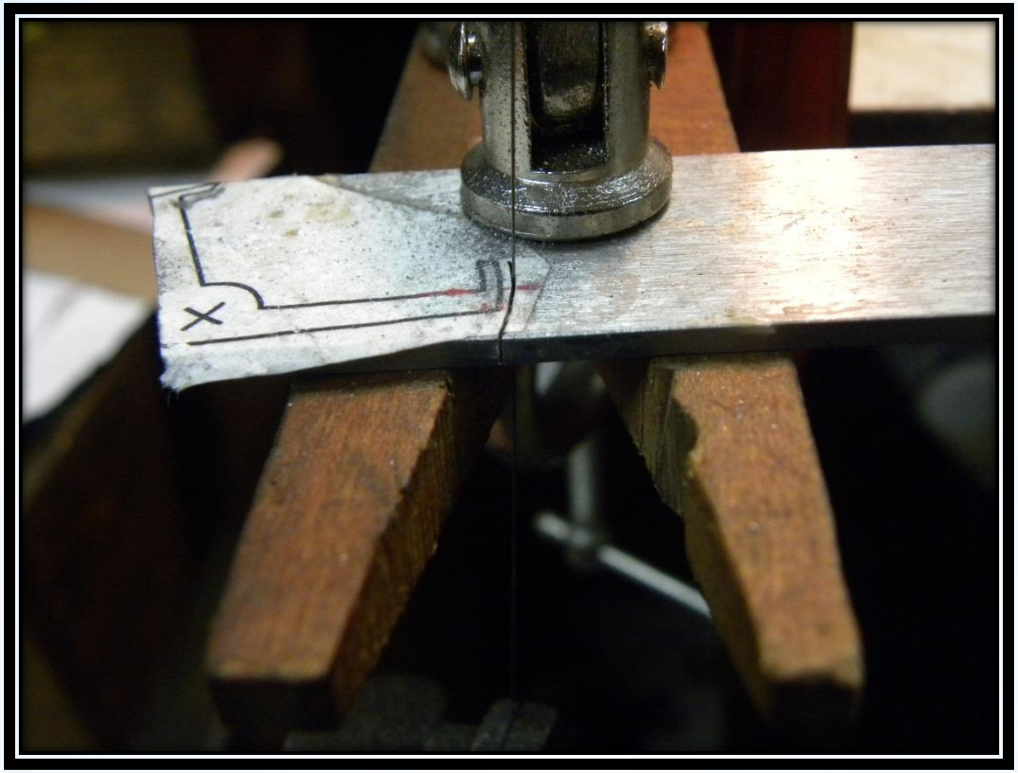

*Sawing The Blank

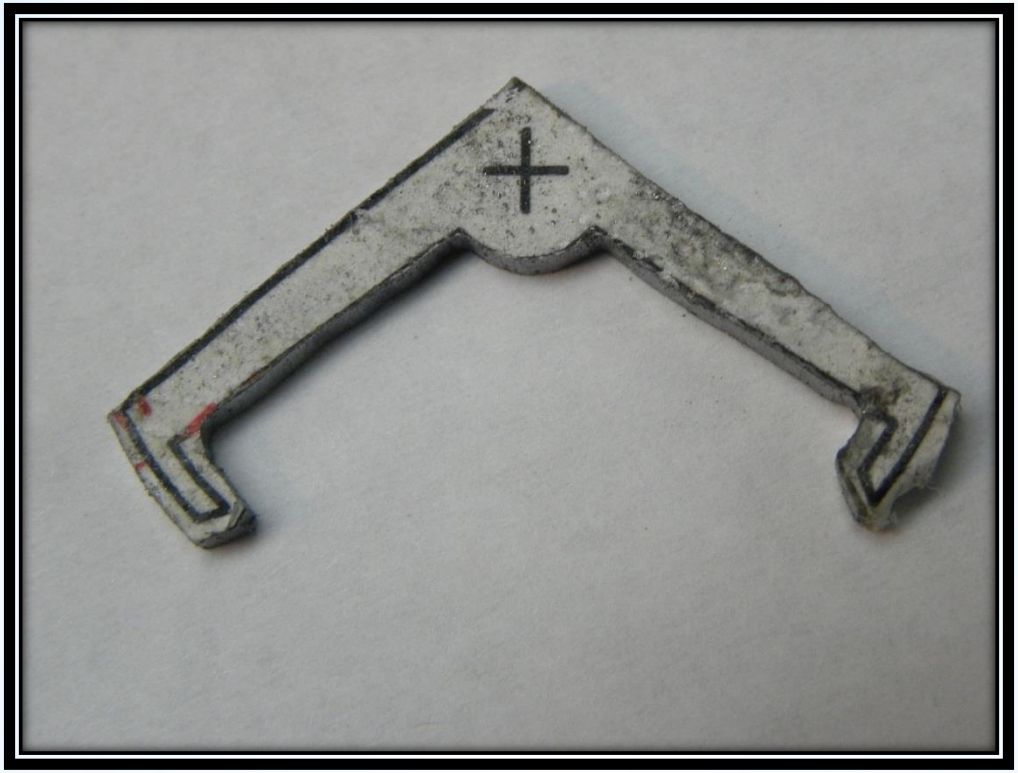

*The Cut Verge Blank

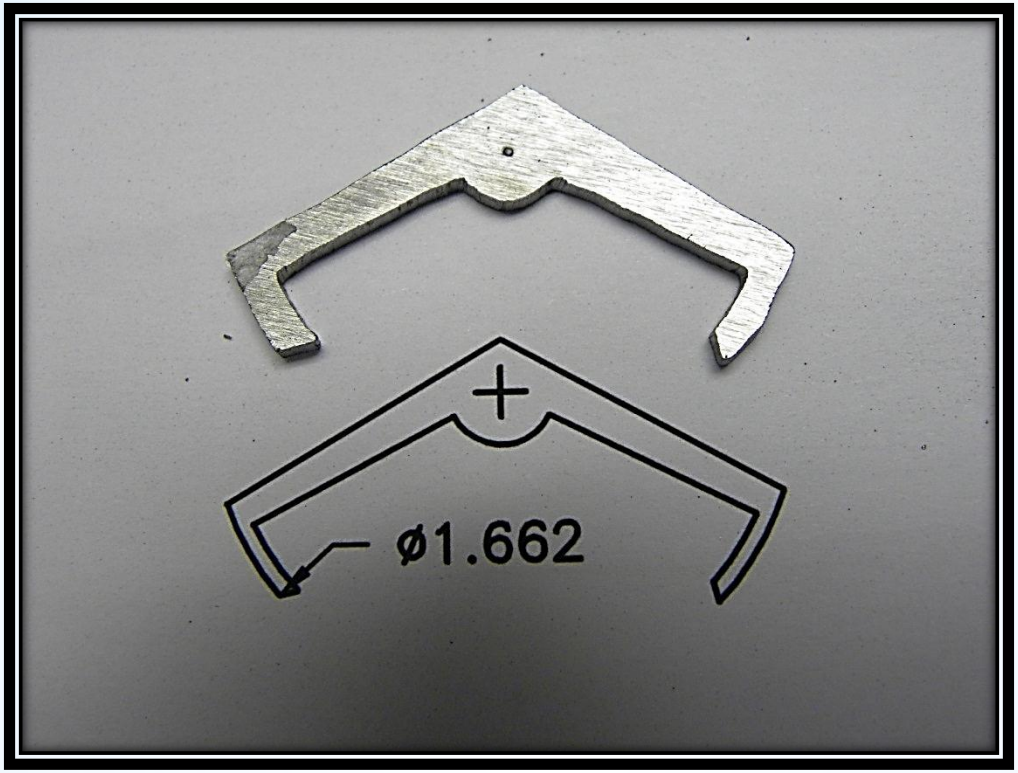

*Outside Diameter

*Using “Crazy Glue” To Mount Blank To Stock.

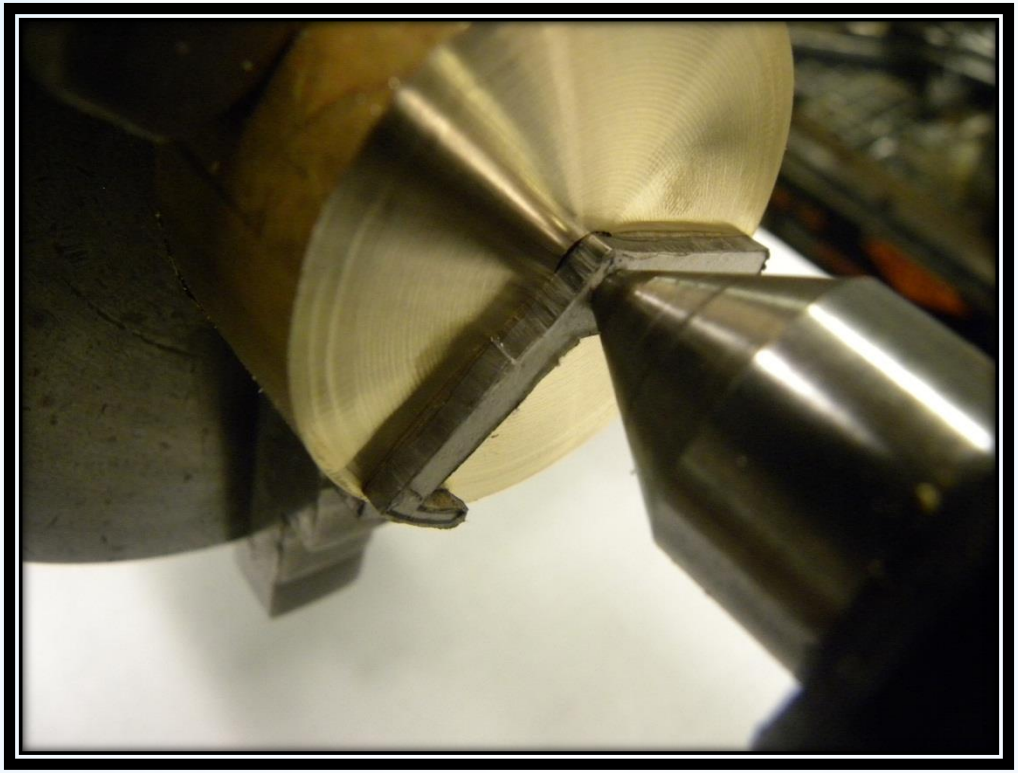

*Centering Verge Blank.

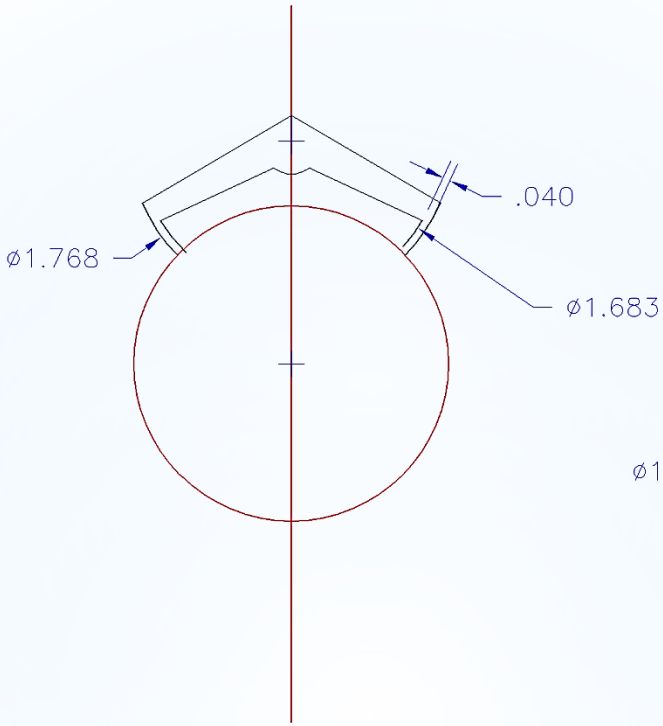

*Inside And Outside Diameters

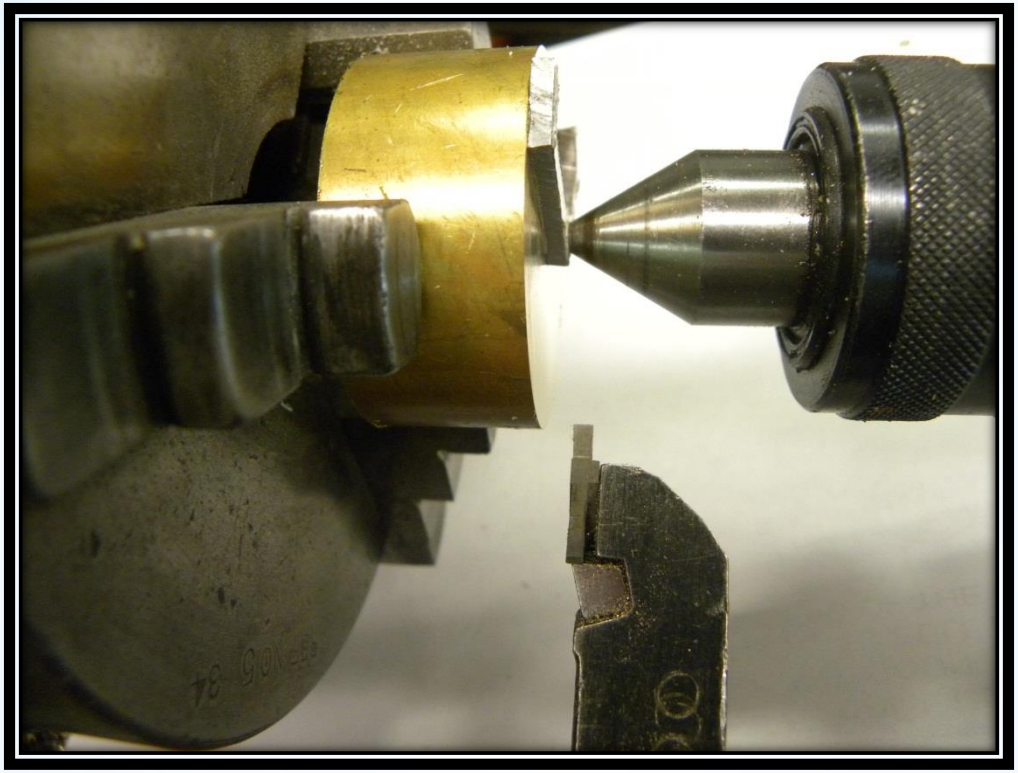

*Turning “OD” To Specification

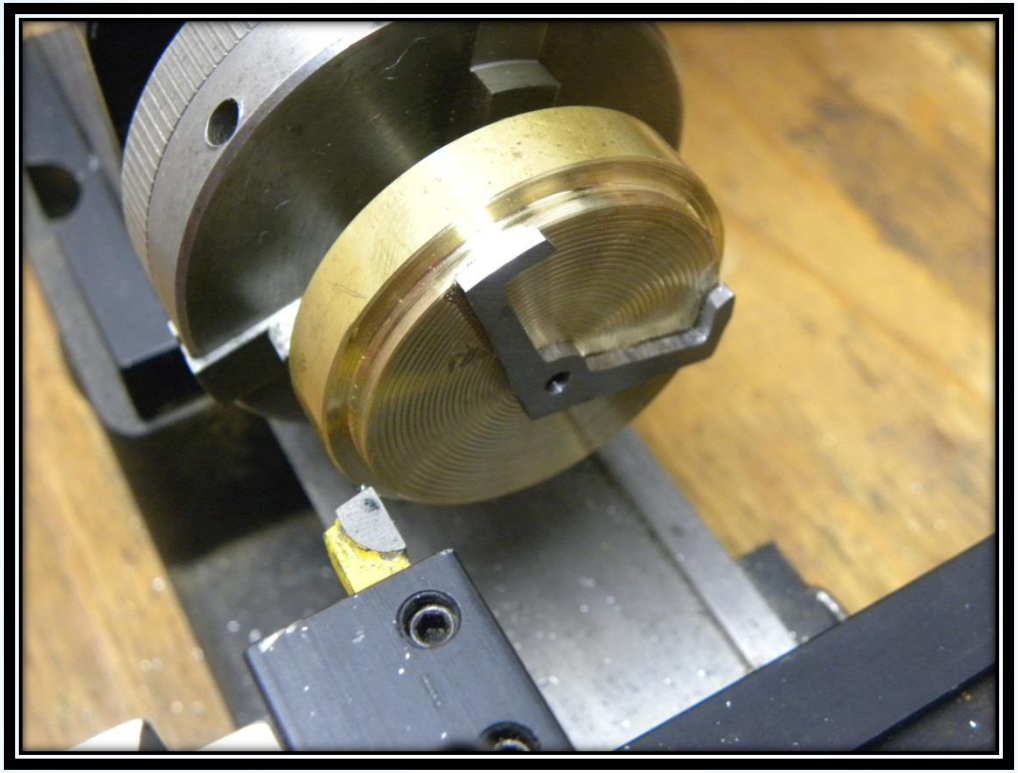

*Sherline Lathe

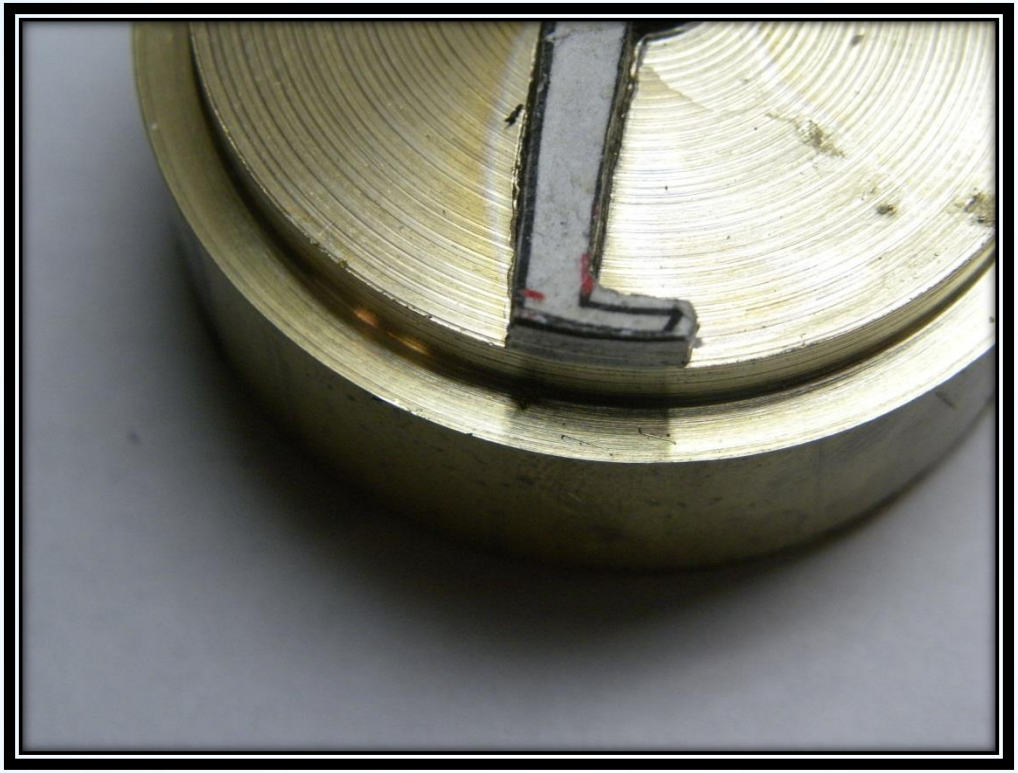

*Turn To Outside Diameter

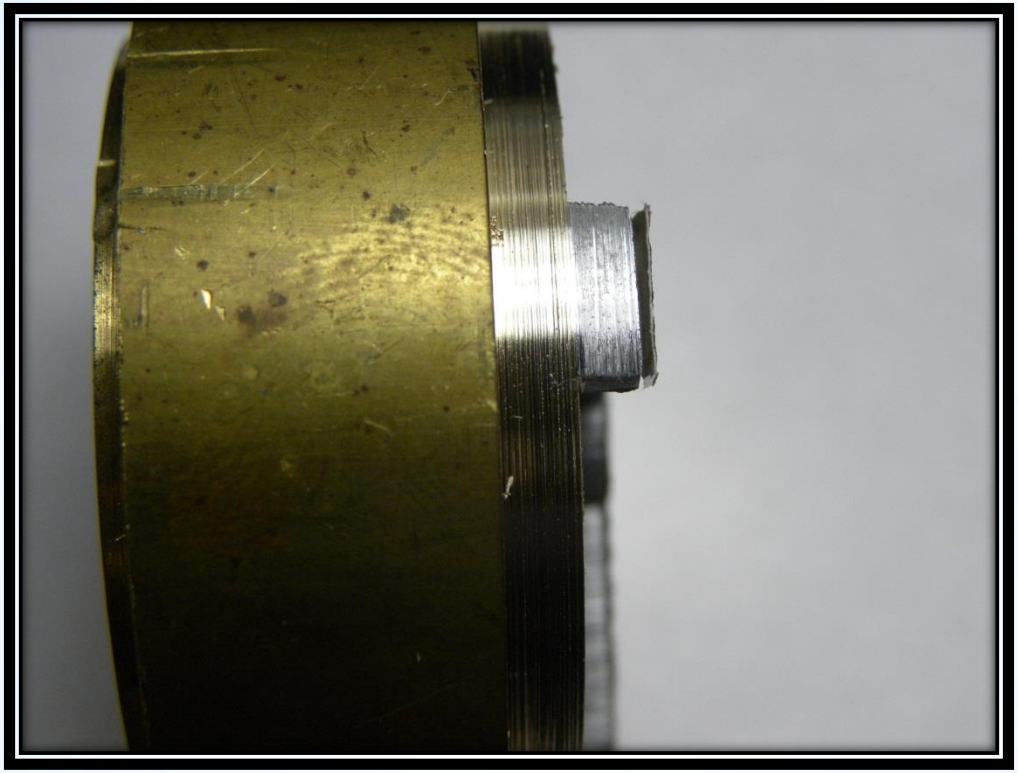

*Outside Locking Face

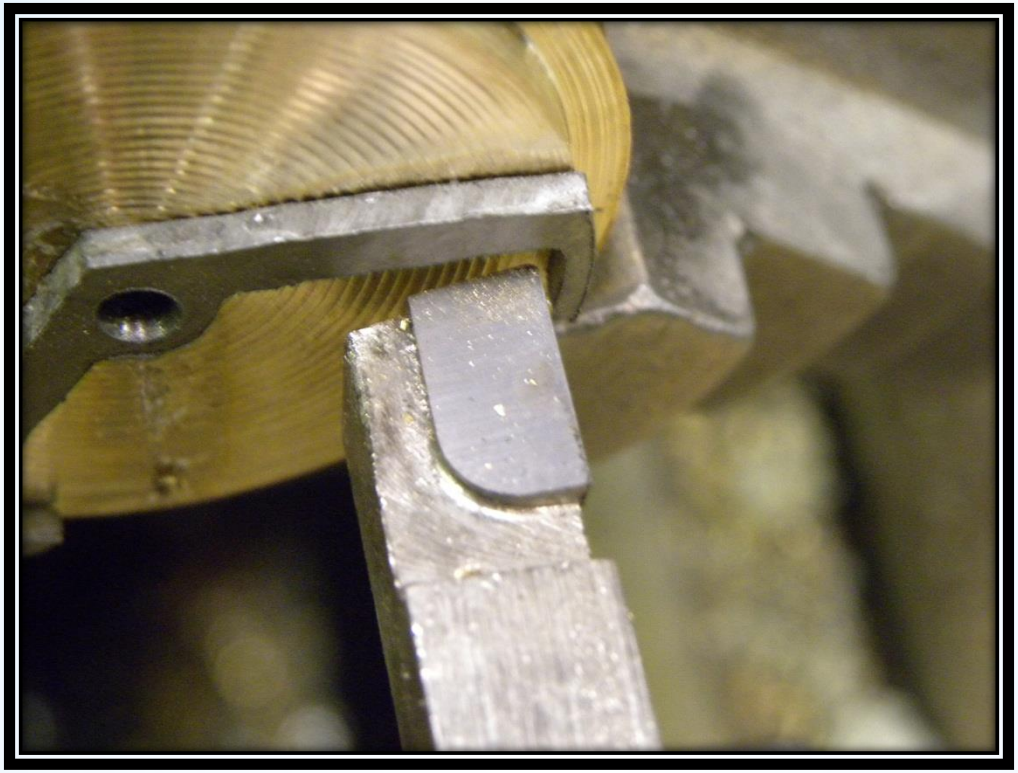

*Hand Turning Inside Locking Face

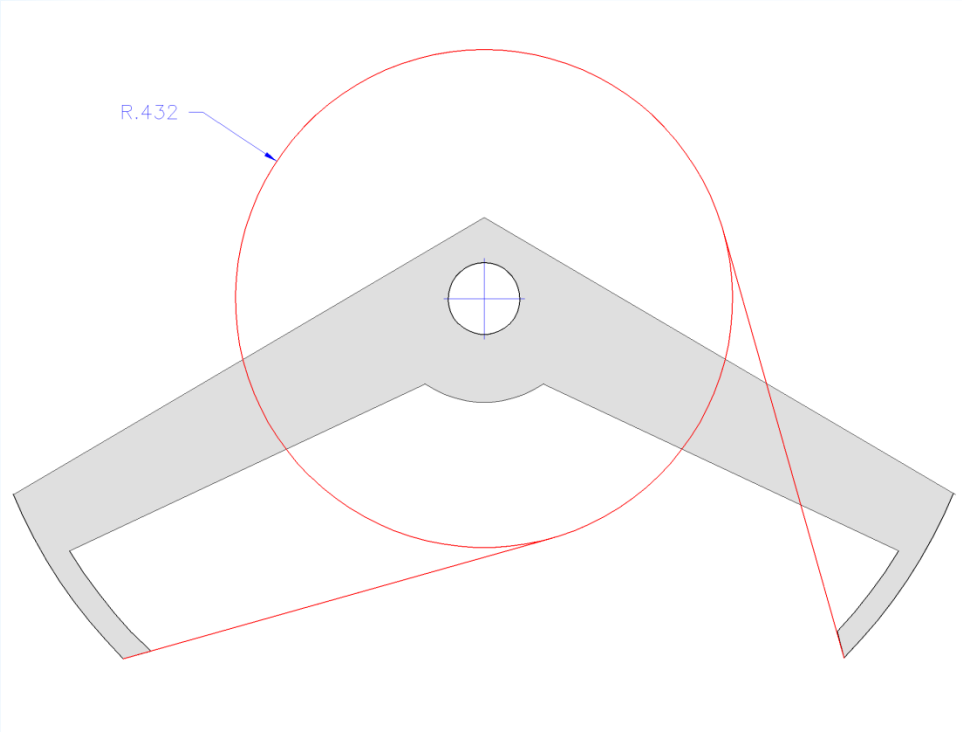

*Grinding Faces To A Reference Circle

Grinding entrance pallet to reference circle (R5).

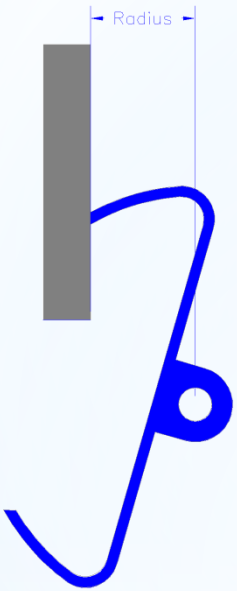

Grinding exit pallet to refenence circle (R5)

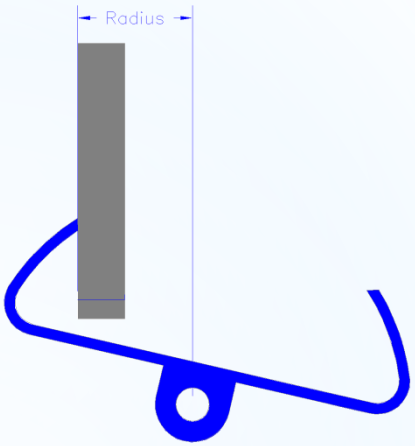

*Grinding Pallet Faces

Entrance Pallet

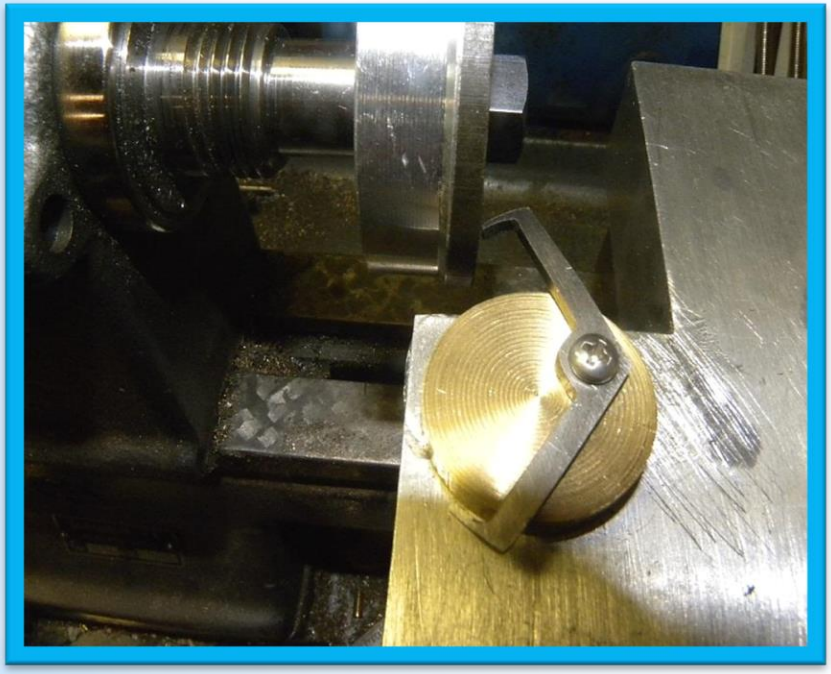

Exit Pallet

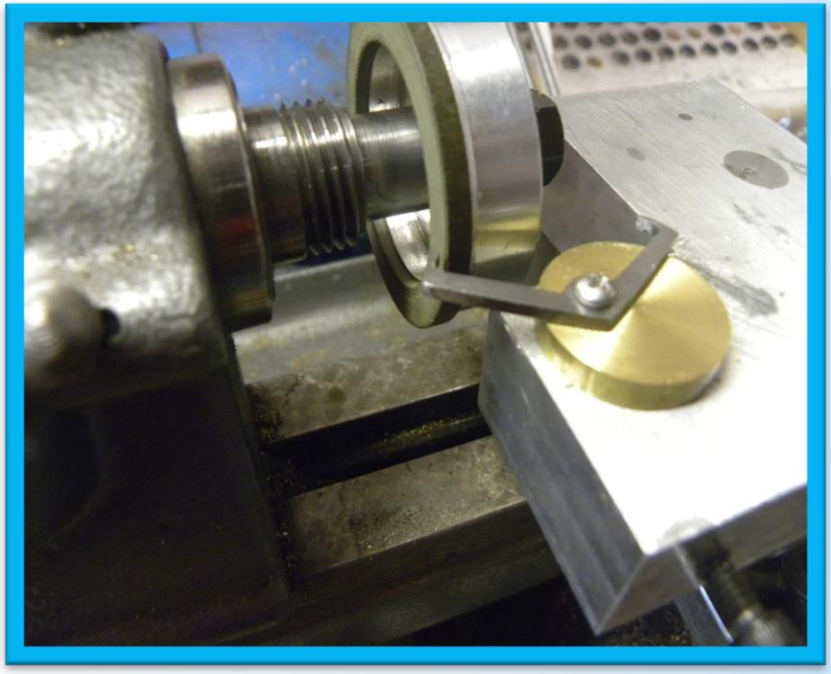

*Grinding The Impulse Faces

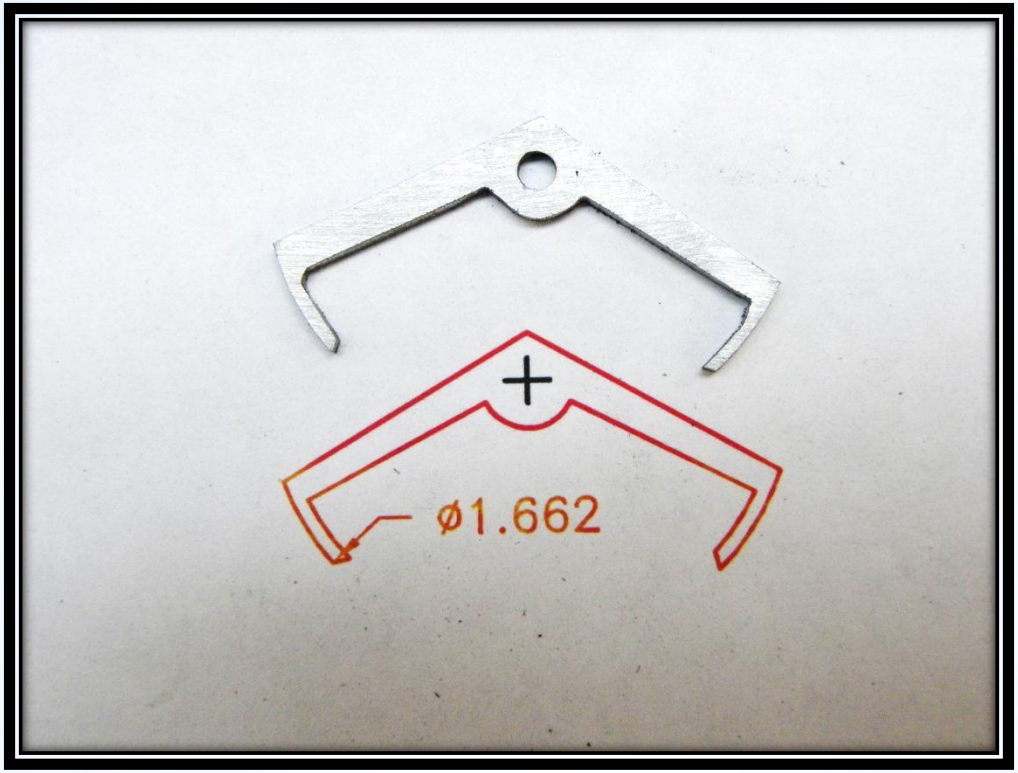

*Ready For Final Adjustments

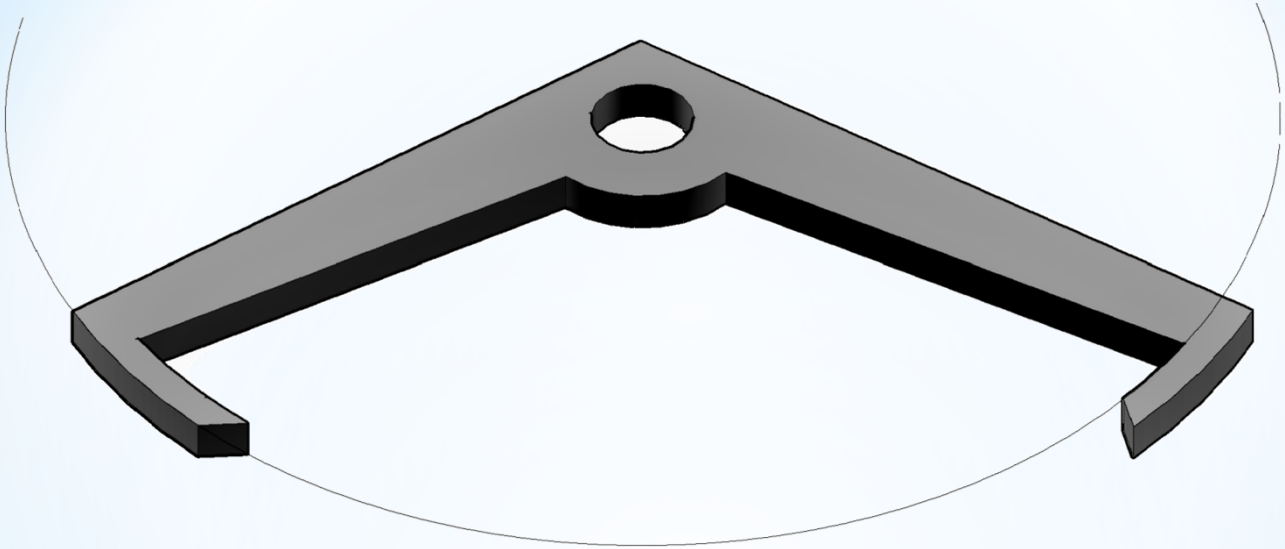

*Unequal Arm Length

*Simple Procedure

* 1. Draw the verge.
  * Measure the inner and outer diameters and the reference circle of the verge.
* 2. Cut out the verge.
* 3. Glue the paper to the tool steel and let dry.
* 4. Using and jewelers saw and saw block, saw out the verge staying OUTSIDE the lines.
* 5. Machine to specifications.
* 6. Put into the clock and make your adjustments.

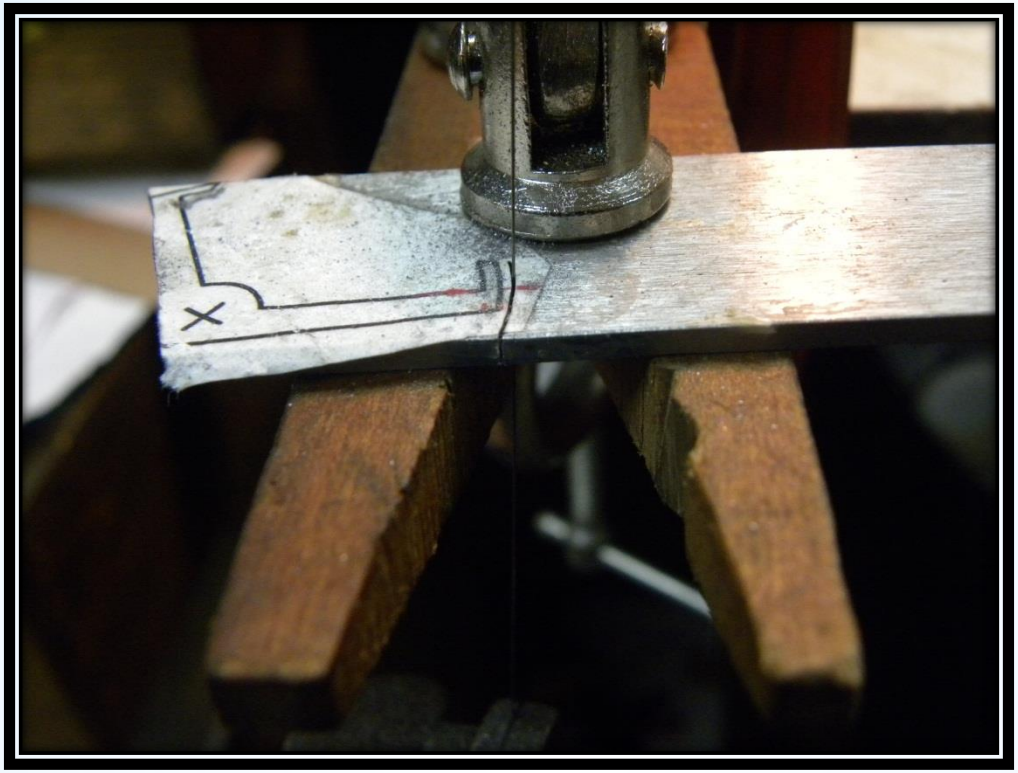

*Sawing The Blank

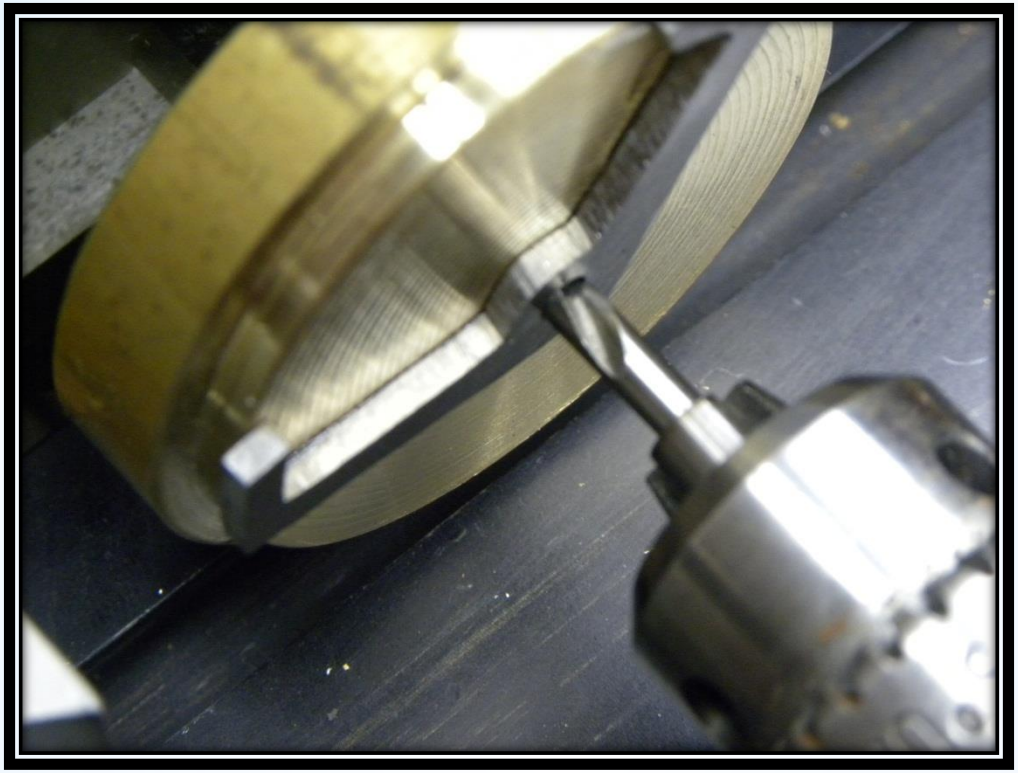

*Centering And Gluing To Block

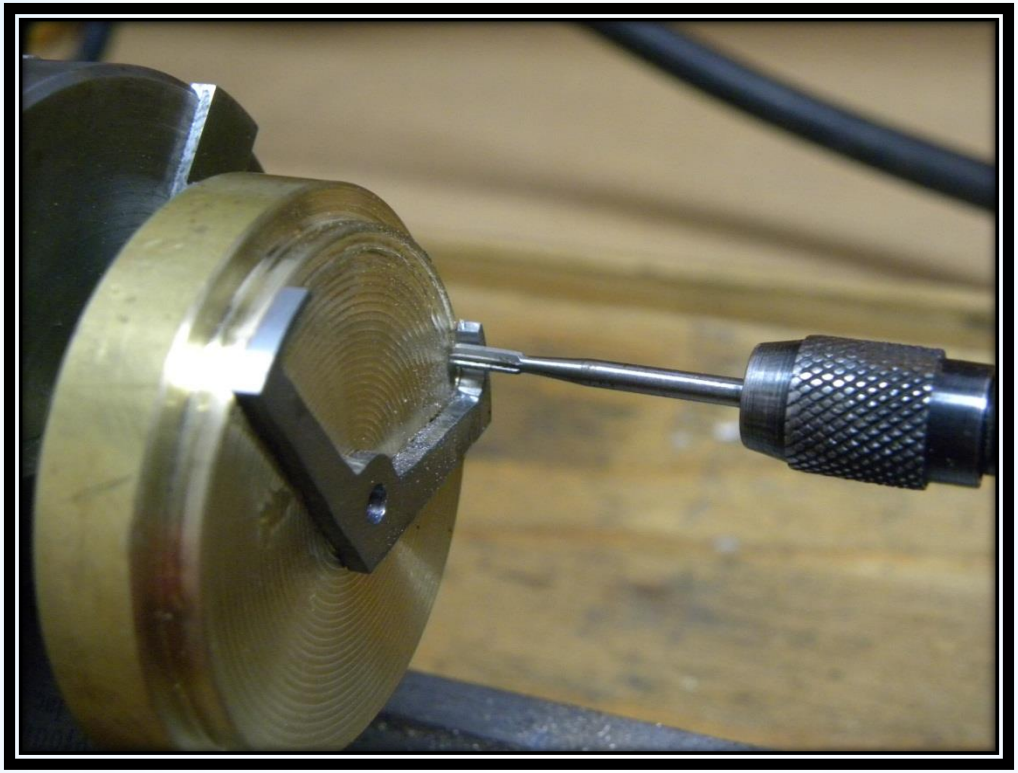

*Using A Small Milling Cutter

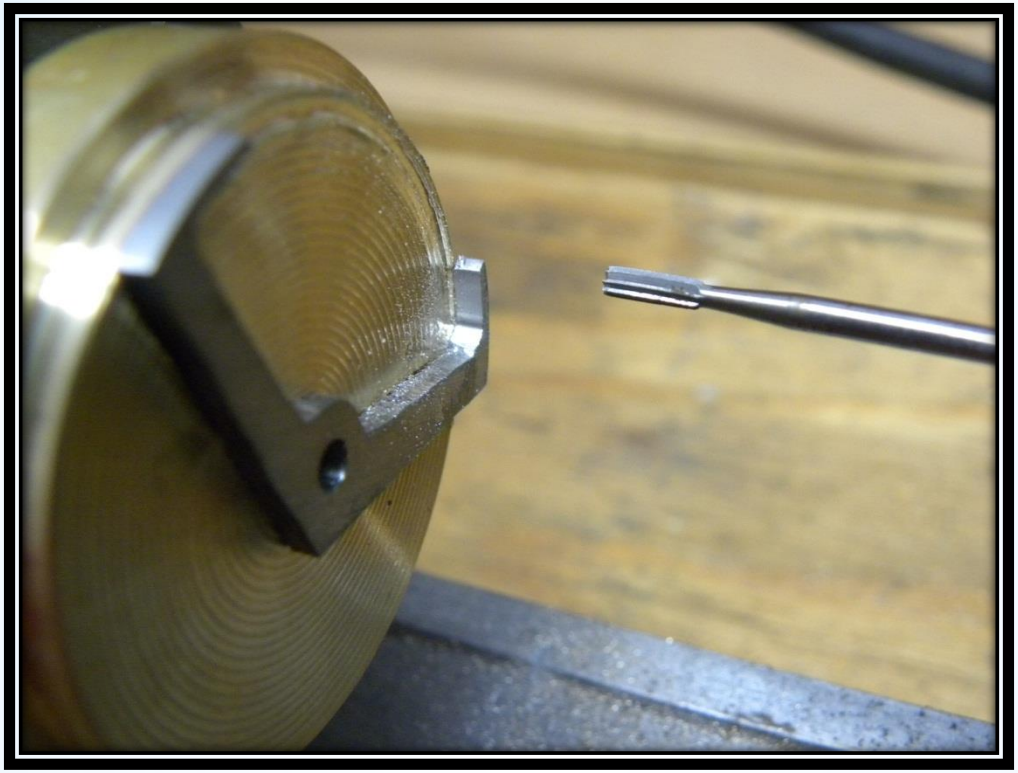

*Milling The Inner And Outer Locking Faces

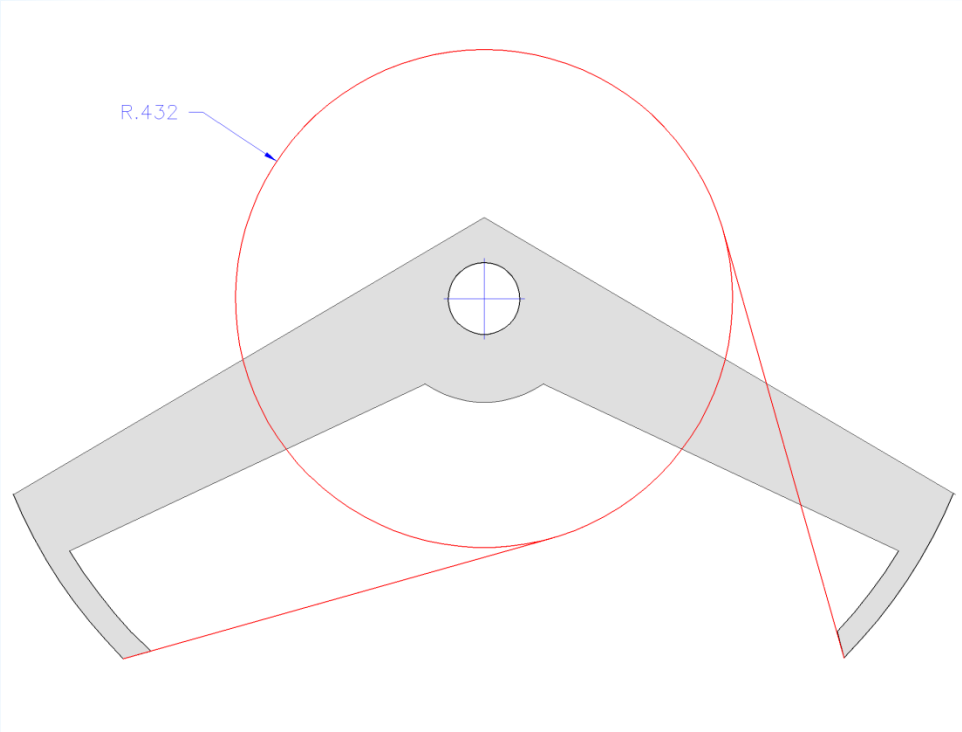

*Grinding Faces To A Reference Circle

Entrance Pallet

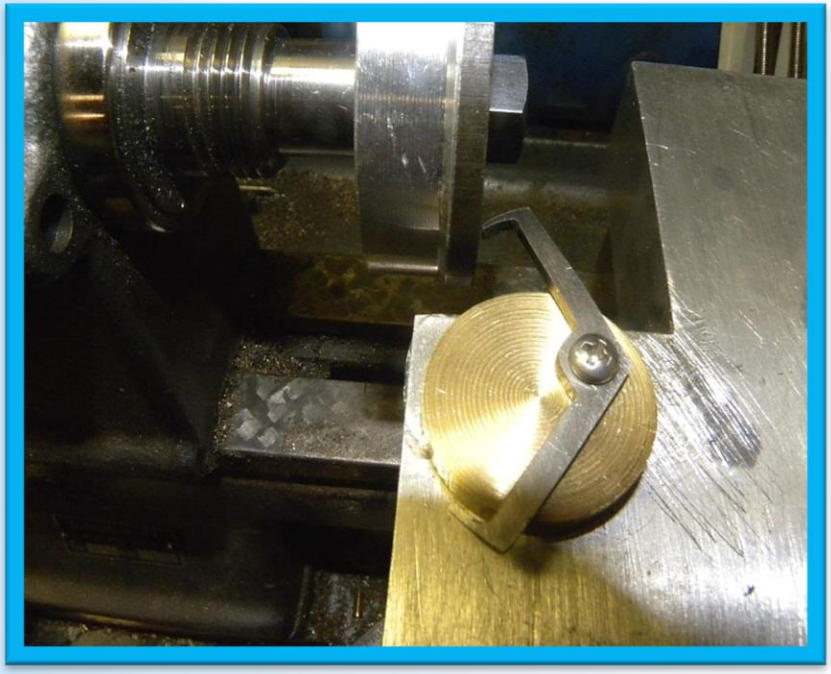

Exit Pallet

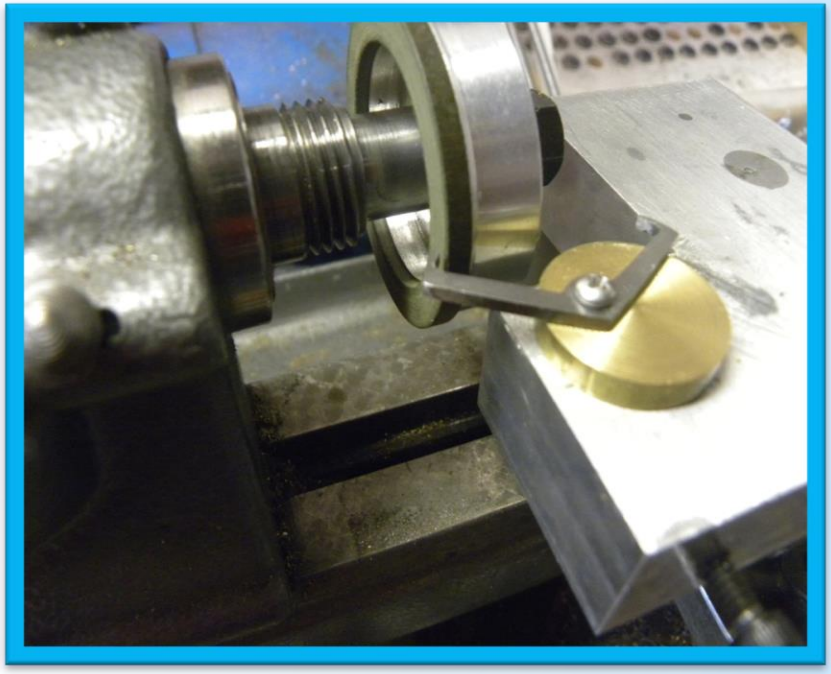

*Grinding The Impulse Faces

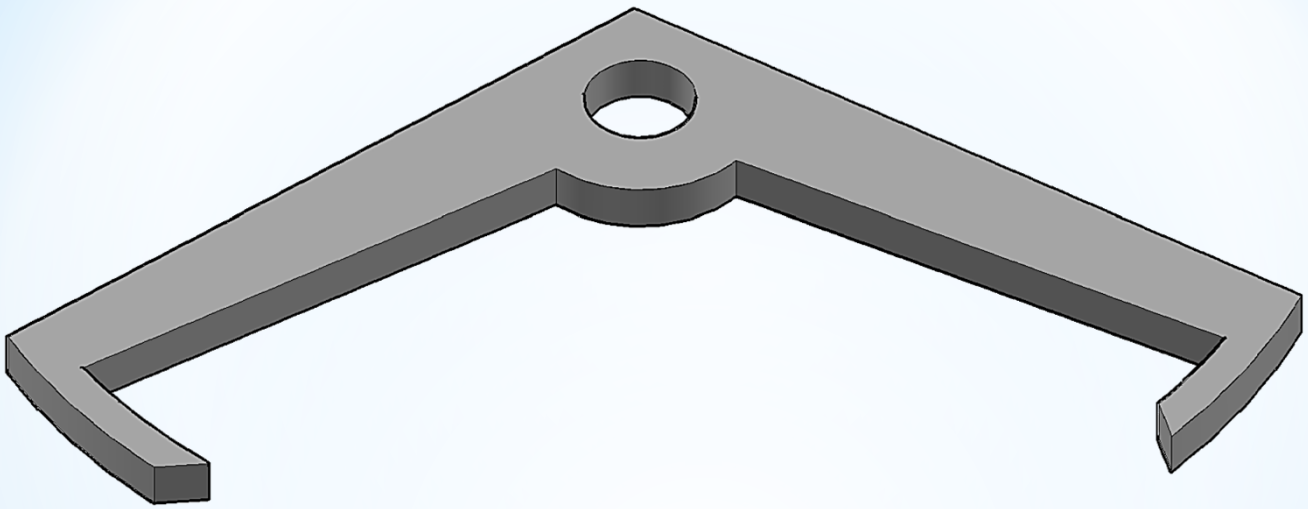

*Adjusting the Dead-Beat Escapement

*Adjusting Guide Lines

* You should have maximum lock with minimum drops.
* Increasing drop, decreases lock.
* Always adjust the entrance pallet first.
* Teeth must never lock on an impulse face.
* Drop should be 10 percent of the pitch (tooth to tooth distance).

Entrance Pallet

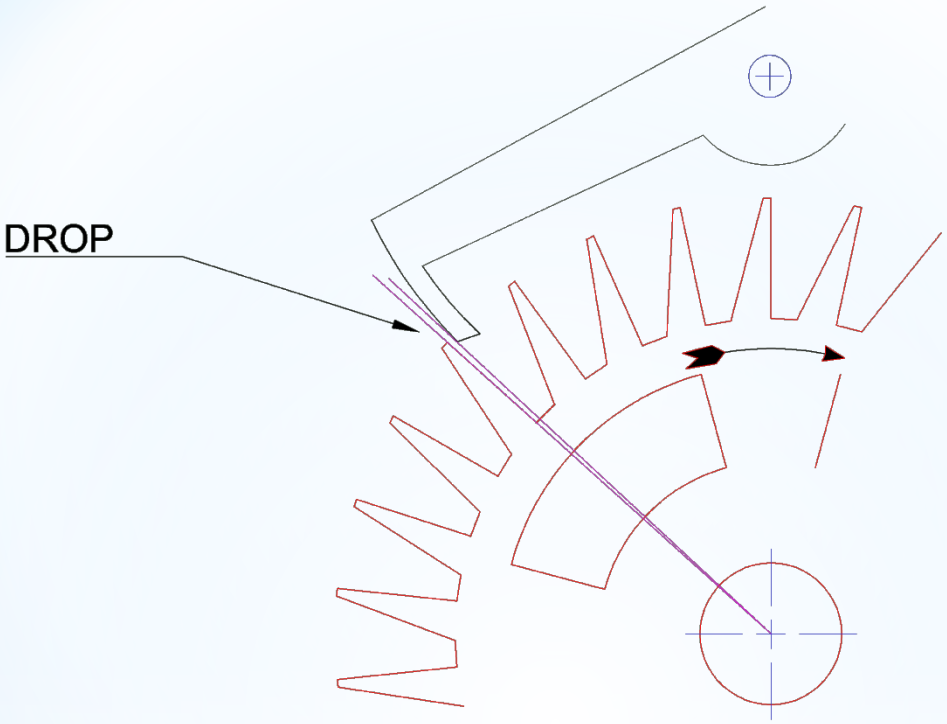

* Drop On Entrance and Exit Pallet Should Be Equal.

Close The Verge To Decrease The Drop On The Entrance Pallet

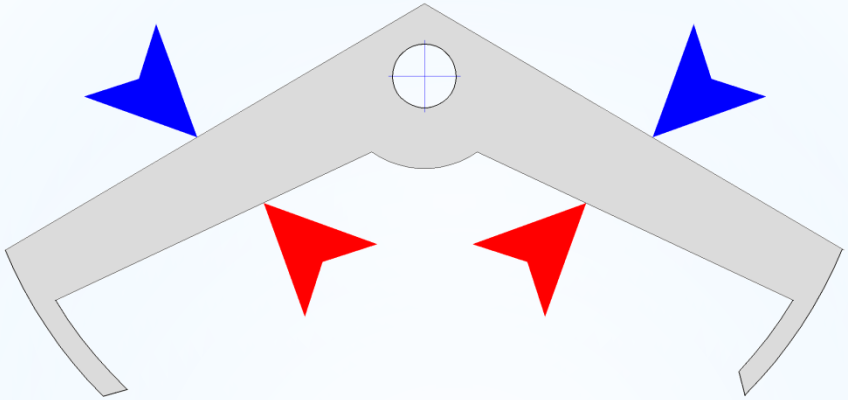

Open The Verge To Increase The Drop On The Entrance Pallet

*Entrance Pallet

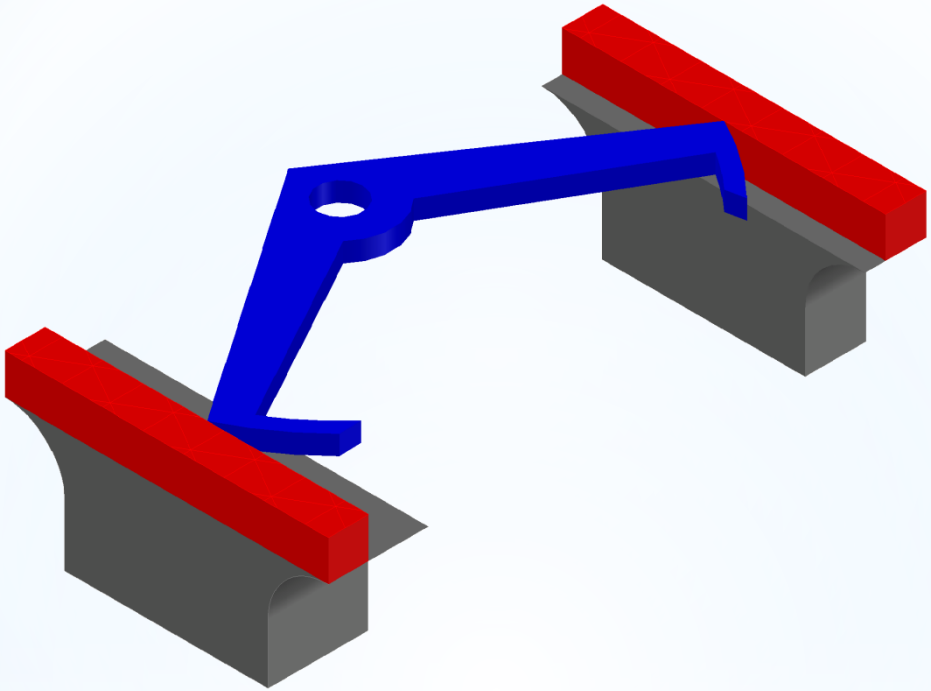

*Closing A Verge In A Vise

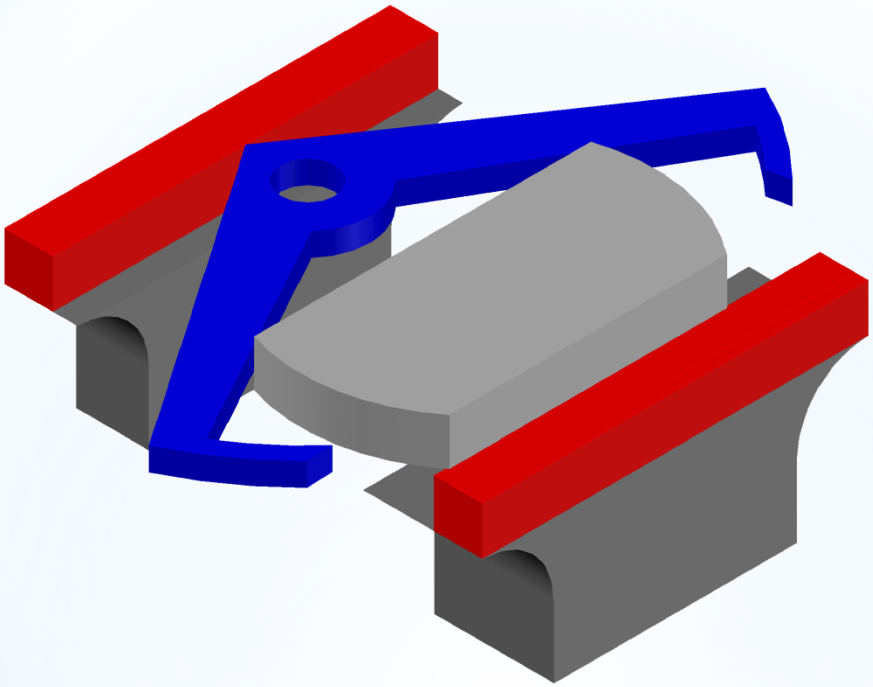

*Opening A Verge In A Vise

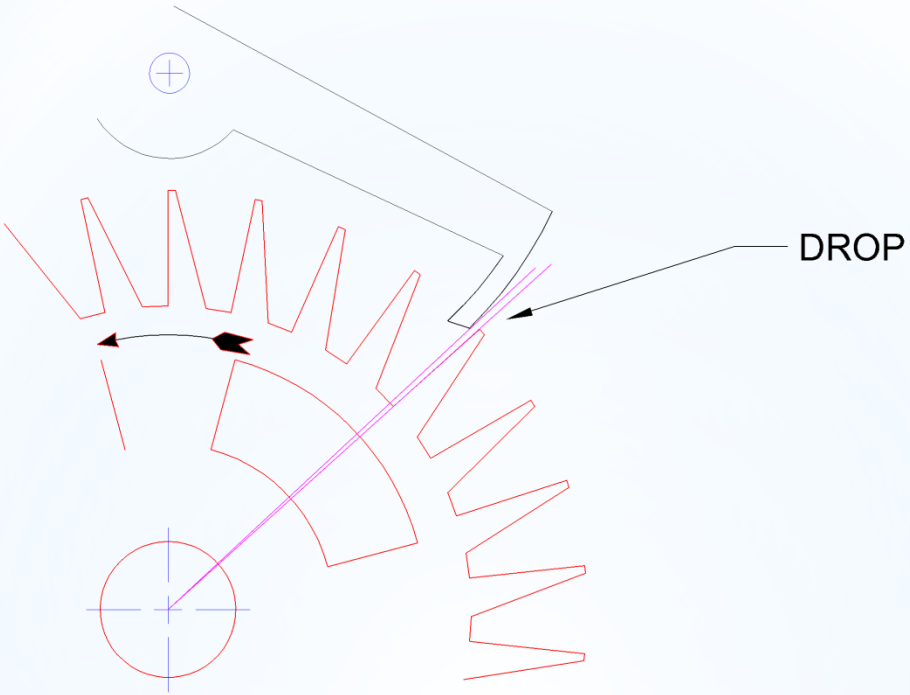

*Drop On Exit Pallet

To Reduce Exit Drop, Move Closer To The Escape Wheel

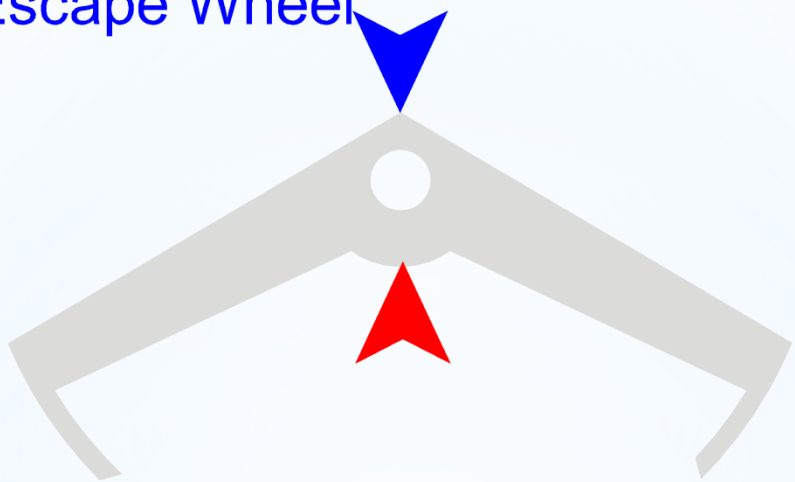

To Increase Exit Drop, Move Away Form the Escape Wheel

*Exit Pallet

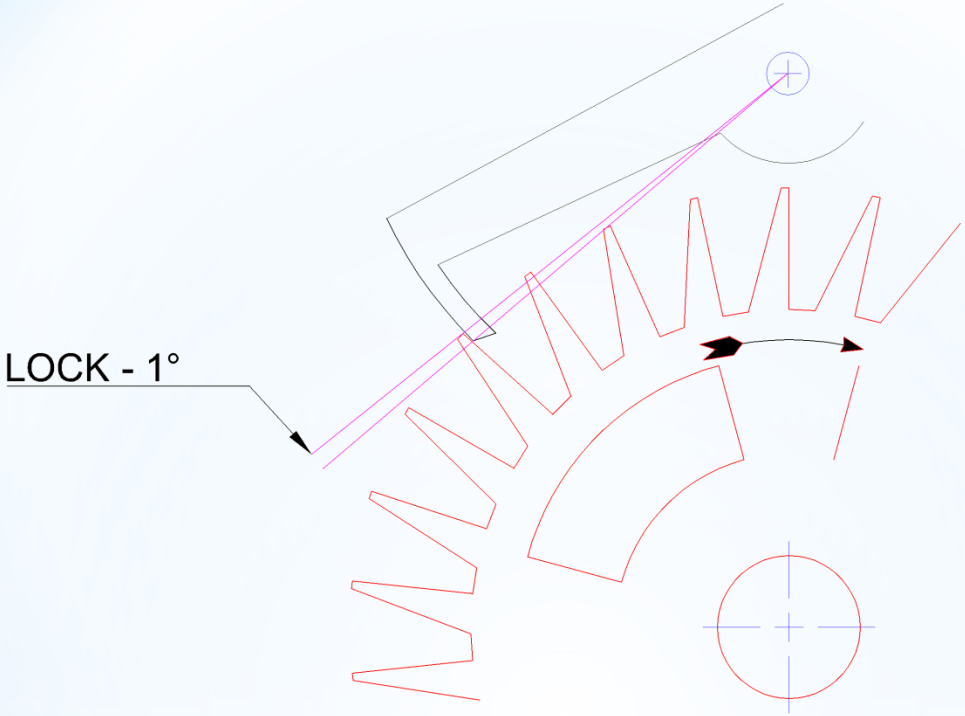

*Increasing Drop Decreases Lock

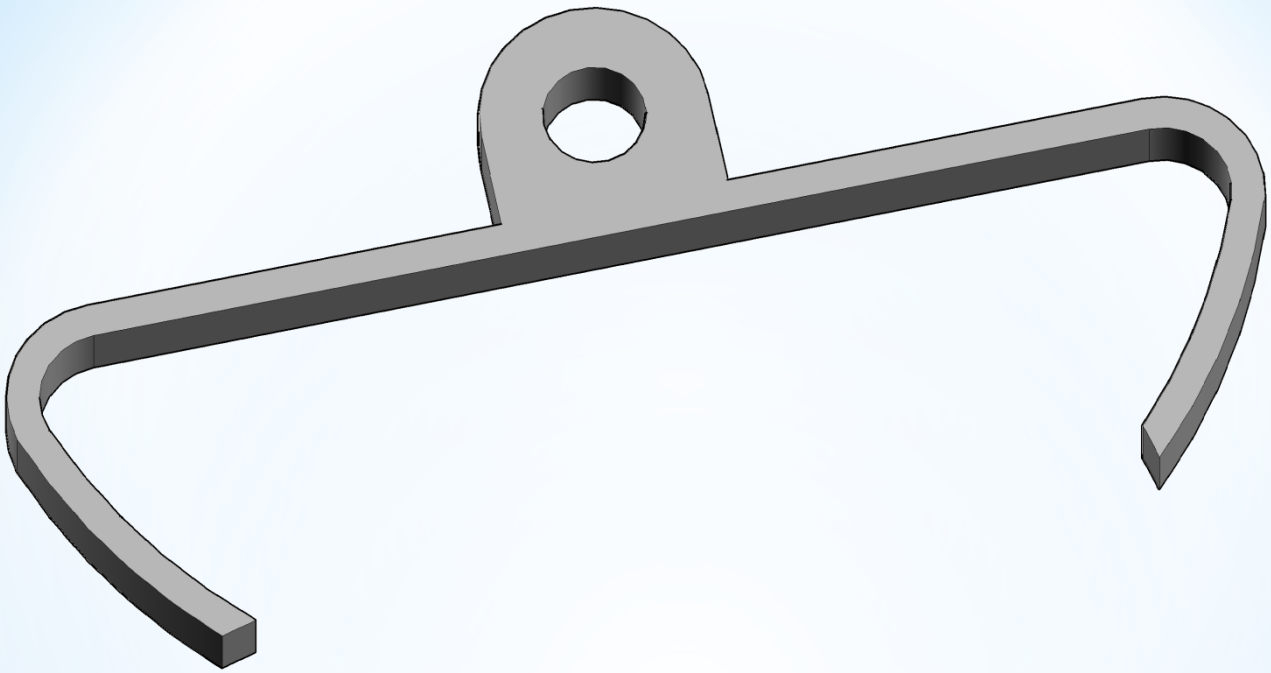

*Restoring The Lift Angle On Dead-Beat Pallets

*Check Lift Angle

* Measure the distance between the center of the verge and one of the pallets.
* Divide this number in half and draw a circle.
* Draw a line tangent to this circle.
* Place verge on the drawing to see if the surfaces match.
* On a heavier pendulum, (Seth Thomas) the lift angle could be less (1.5 degrees)
    * Take the distance between centers, divide it in half for 2 degrees, cut it in half again for 1 degree, and cut it in half again for ½ degree.

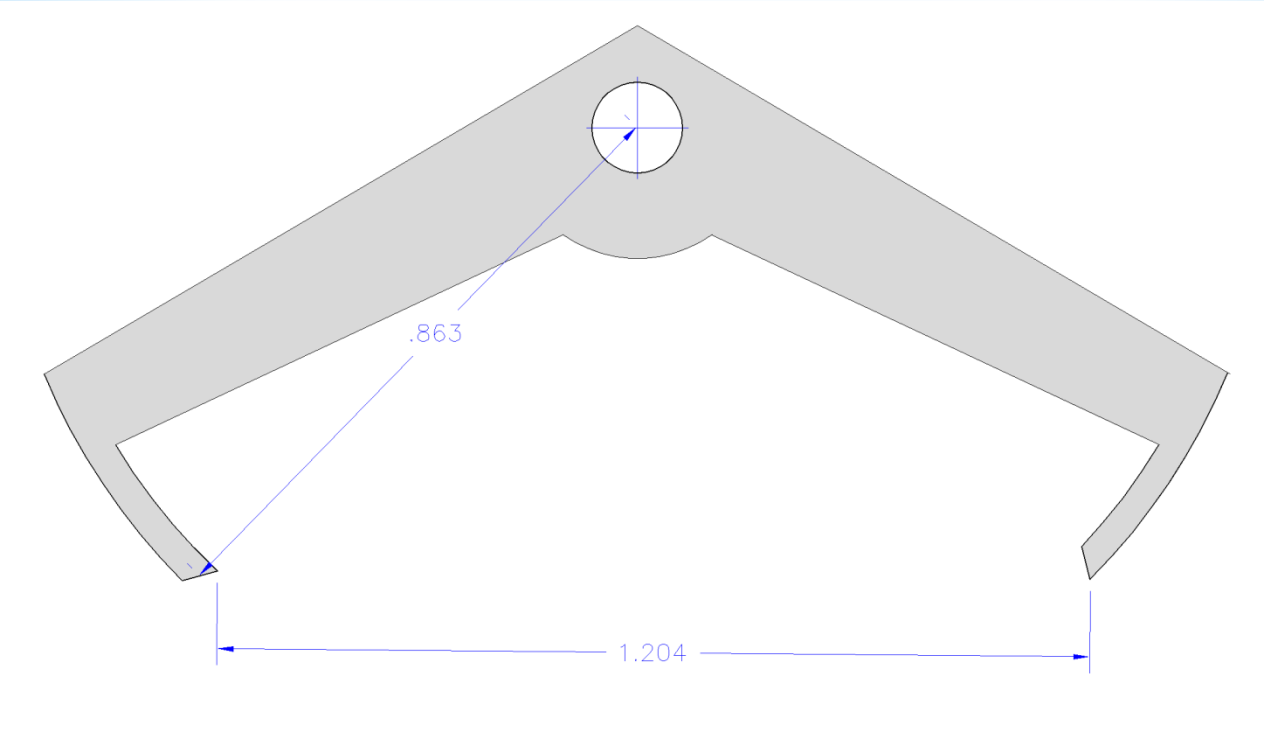

* Measure with a caliper from the center of the verge to the center of either the entrance or exit pallet to check the lift angle.

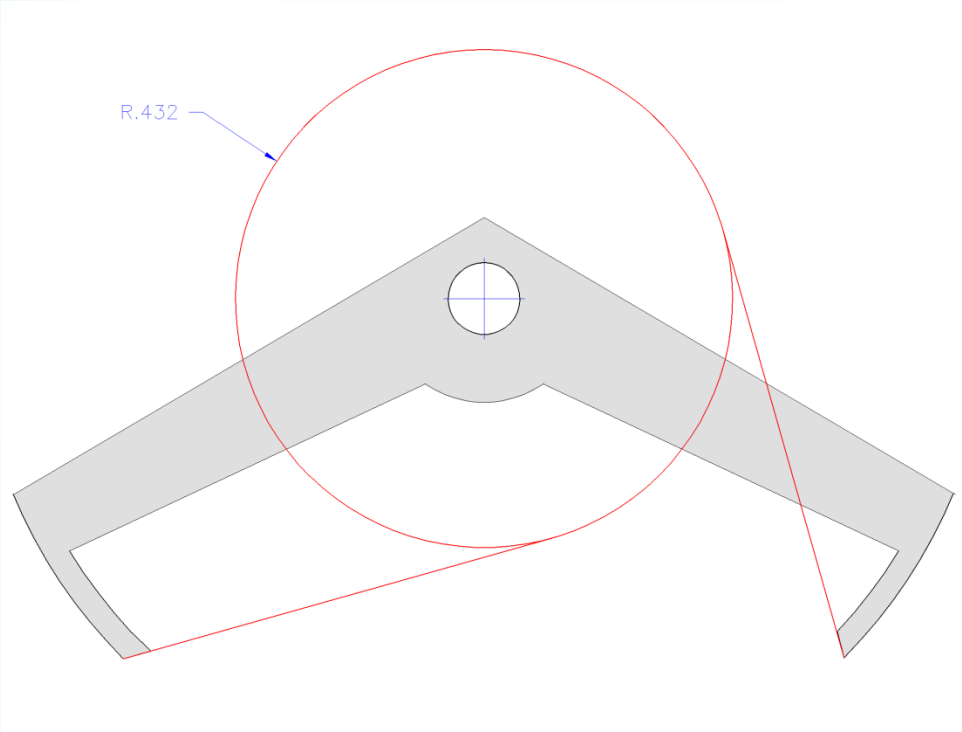

*2 Degree Lift Angle

Entrance Pallet

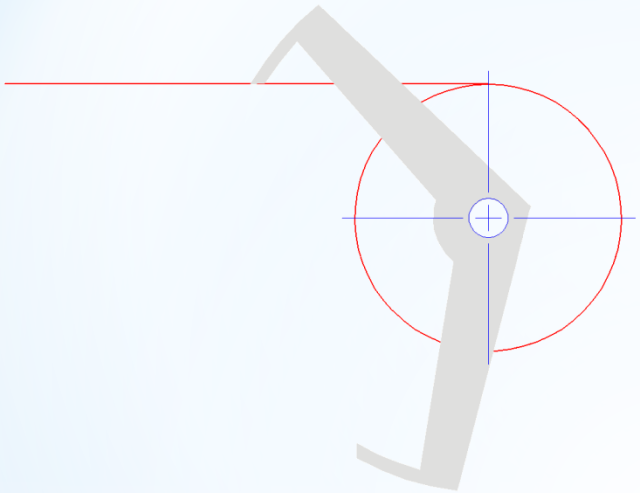

Exit Pallet

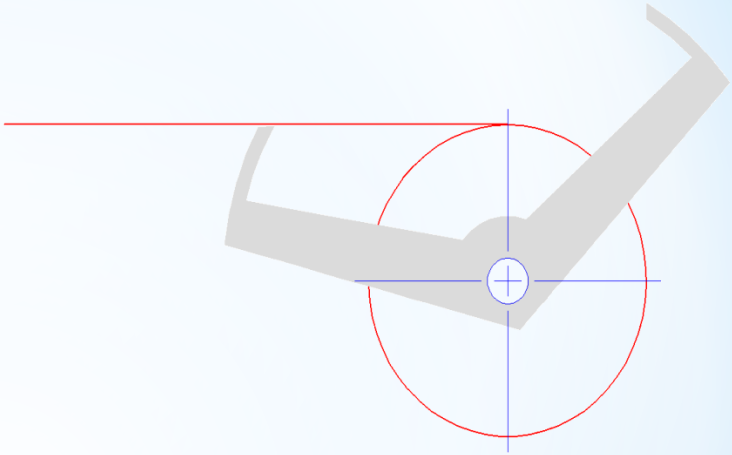

*Checking The Pallet Lift Angle

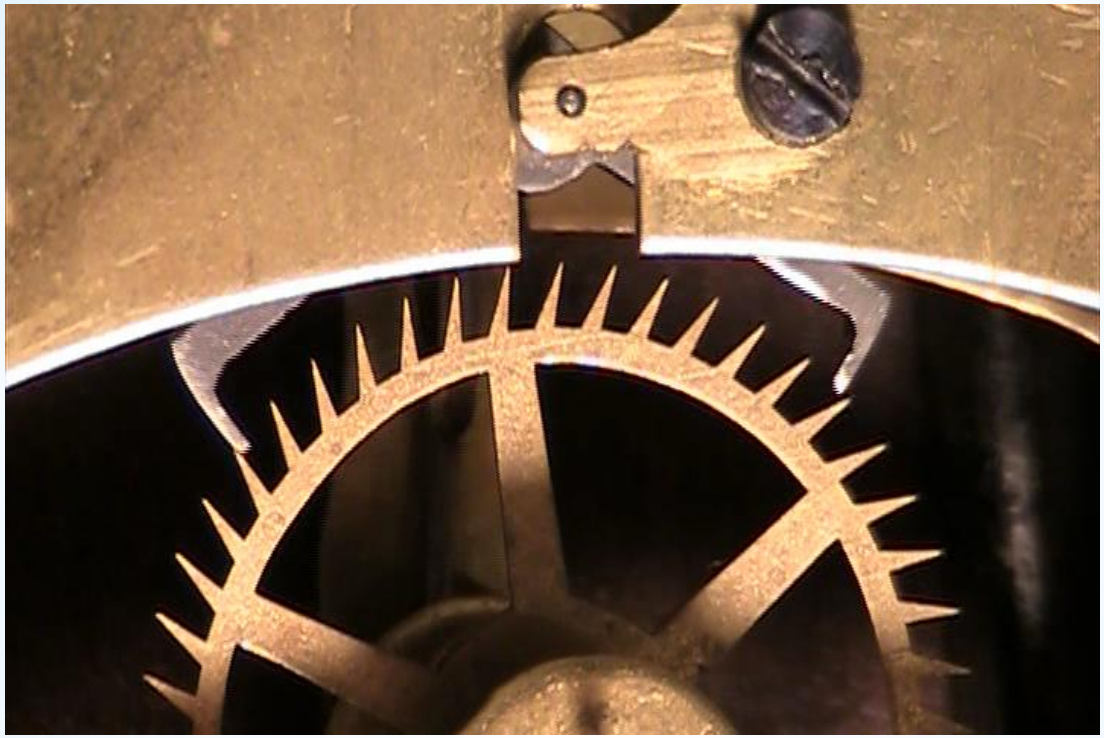

*Pre-Testing Before Finishing

*Questions

The End